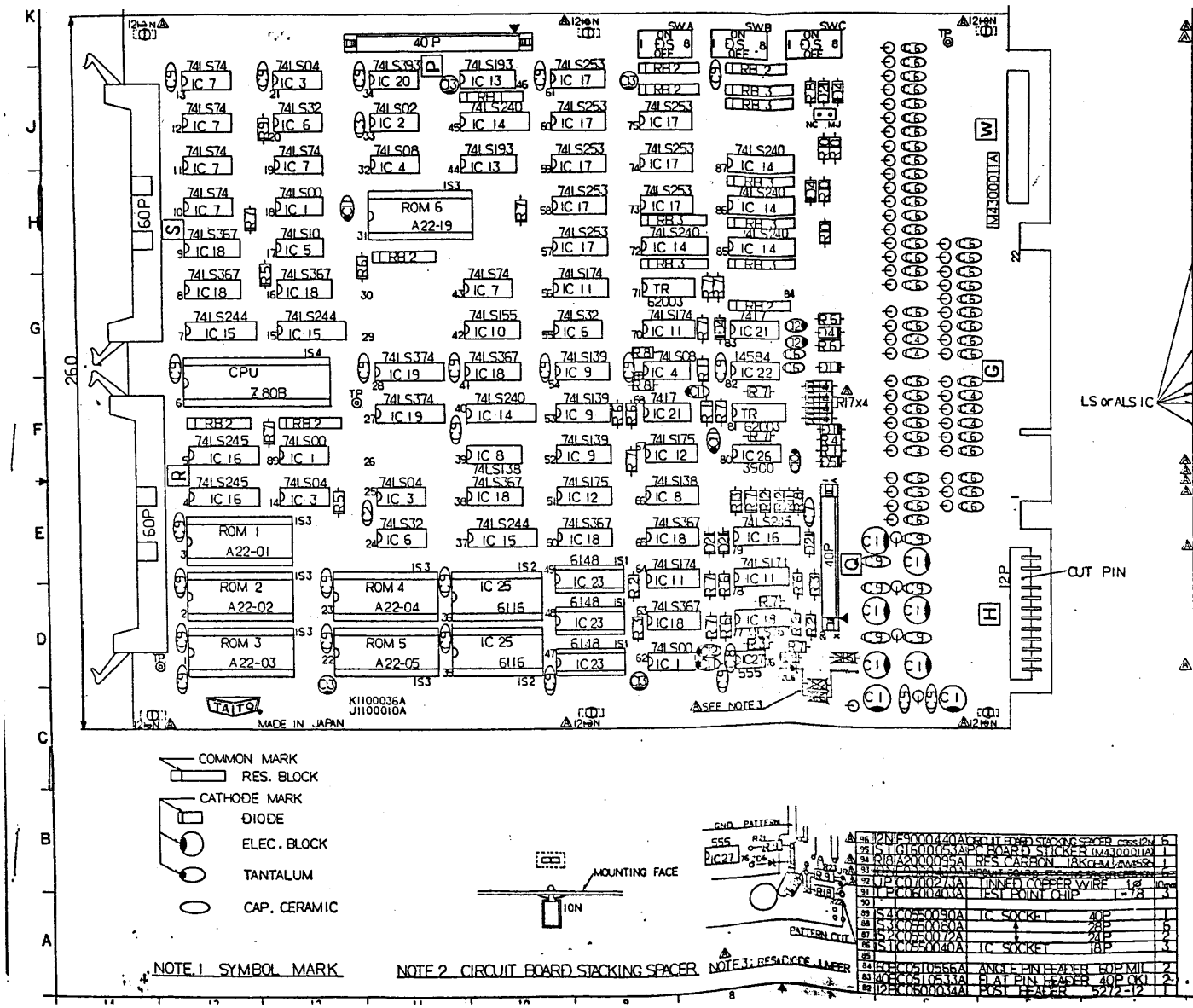

81	DSC0200IIA	DIP SW	DS5-8	1
80	RIA221105A	RES OXIDE	270HM1W±5%	4
79	FCI101201A	BEADS FILTER	ZBE503S 01TA	54
78				
77	ROM6 P2001148A	P-ROM	A22-19 (P5)	1
76	ROM5 P2001134A		05 (27128)	1
75	ROM4 P2001133A		04	1
74	ROM3 P2001132A		03	1
73	ROM2 P2001131A		02	1
72	ROM1 P2001130A	P-ROM	A22-01 (27128)	1
71				
70	IC2 BI172526A	TIMER	555	1
69	IC3 BI170440A	OP AMP	3900	1
68	IC2 BI0X0019A	S RAM	5114	1
67	IC2 B08X2014C	CPU	Z80B	2
66	IC2 B07X7002A	C-MOS RAM	6148	1
65	IC2 B07X0584A	C-MOS	14584	3
64	IC2 B03X0017A	TTL	7417	2
63				
62	IC2 B0IX0093A	TTL	74LS393	1
61	IC9 B0IX0374A		374	2
60	IC8 B0IX0367A		367	9
59	IC7 B0IX0253A		253	8
58	IC6 B0IX0245A		245	3
57	IC5 B0IX0244A		244	3
56	IC4 B0IX0240A		240	5
55	IC3 B0IX0193A		193	2
54	IC2 B0IX0175A		175	2
53	IC1 B0IX0174A		174	4
52	IC0 B0IX0155A		155	1
51	IC9 B0IX0139A		139	1
50	IC8 B0IX0138A		138	2
49	IC7 B0IX0074A		74	5
48	IC6 B0IX0032A		32	1
47	IC5 B0IX0010A		10	1
46	IC4 B0IX0008A		08	2
45	IC3 B0IX0004A		04	3
44	IC2 B0IX0002A		02	1
43	IC1 B0IX0000A	TTL	74LS00	1
42	RB3 A2239003A	RRC	45CR1E2B	3
41	RB2 A2231081A	RES BLOCK	4.7K 9S	7
40	RB1 A2241065A	RES BLOCK	1K 9S	7
39	[illegible]		[illegible]	[illegible]
38	[illegible]		[illegible]	[illegible]
37	[illegible]		[illegible]	[illegible]
36	R14 A200031A		50K1W±5%	1
35	R12 A200027A		30K	1
34	R11 A200013A		10K	2
33	R10 A200037A		22K	1
32	R9 A200039A		10K	4
31	R8 A200018A		47K	1
30	R7 A200005A		1K	1
29	R6 A200057A		470	3
28	R5 A200055A		330	2
27	R4 A200051A		270	1
26	R3 A200049A		220	1
25	R2 A200043A		120	1
24	R1 A200041A	RES CARBON	100 1/2W±5%	1
23	C13 A120131A	ELEC BLOCK	16V100	1
22	C12 A120519A	CAP TANT DIP	35V10	4
21	C11 A120507A	CAP TANT DIP	25V10	3
20	C10 A120323A	CAP TANT DIP	16V22	54
19	C9 A200317A	CAP CERAMIC	50V104	30
18	C8 A200309A		473	1
17	C7 A200305A		333	1
16	C6 A200293A		103	46
15				
14	C4 A200253A		220	6
13	C3 A200251A		180	1
12	C2 A200245A	CAP CERAMIC	50V100	1
11	C1 A100035A	ELEC BLOCK	16V220	8
10				
9	D5 A210045A	ZENER	RD5A-M	1
8	D4 A210037A	ZENER	RD4FC	4
7				
6	D2 A200048A	DIODE	1S1588	5
5	D1 A200029A	DIODE	WX	2
4				
3	TR A010023A	TR ARRAY	TD62003	2
2				
1	J1100010A	CPU P.C. BOARD		1

96	12N F9000440A	CIRCUIT BOARD STACKING SPACER	CBS12N	6
95	STI G1500035A	PC BOARD STICKER	M43000IIA	1
94	RIB A200039A	RES CARBON	18KOHM 1/4W±5%	1
93	[illegible]	[illegible]	[illegible]	[illegible]
92	UP C0700273A	TINNED COPPER WIRE	1φ 10cm	1
91	IP C0600403A	TEST POINT CHIP	T-78	3
90				
89	S4 C0550090A	IC SOCKET	40P	1
88	S3 C0550080A		28P	5
87	S2 C0550072A		24P	2
86	S1 C0550040A	IC SOCKET	18P	3
85				
84	60 FC051056A	ANGLE PIN HEADER	60P MIL	2
83	40 FC051033A	FLAT PIN HEADER	40P OKI	2
82	12 FC0600034A	POSI HEADER	5212-12	1

PARTS LIST

DATE 7.2.84 DRAWN K.Mikami

TAITO CORPORATION

CPU BOARD Assy

SIZE A1 DWG NO. K1100036A

DO NOT SCALE DRAWING

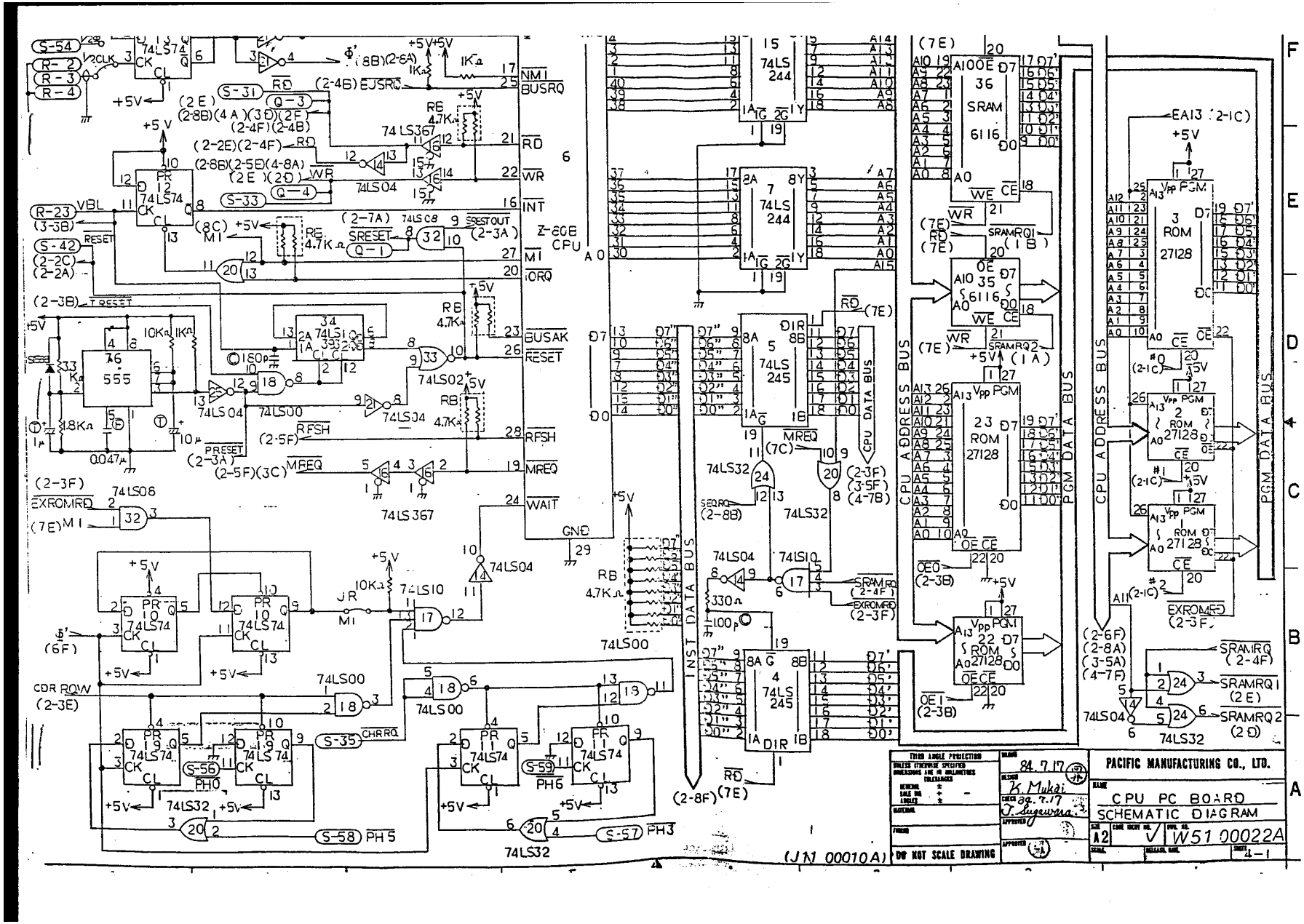
Z-80B CPU
74LS244
SRAM 6116
27128 ROM
74LS245
INST DATA BUS
CPU DATA BUS
CPU ADDRESS BUS
PGM DATA BUS
PACIFIC MANUFACTURING CO., LTD.
CPU PC BOARD
SCHEMATIC DIAGRAM
W51 00022A
DO NOT SCALE DRAWING
(J11 00010A)

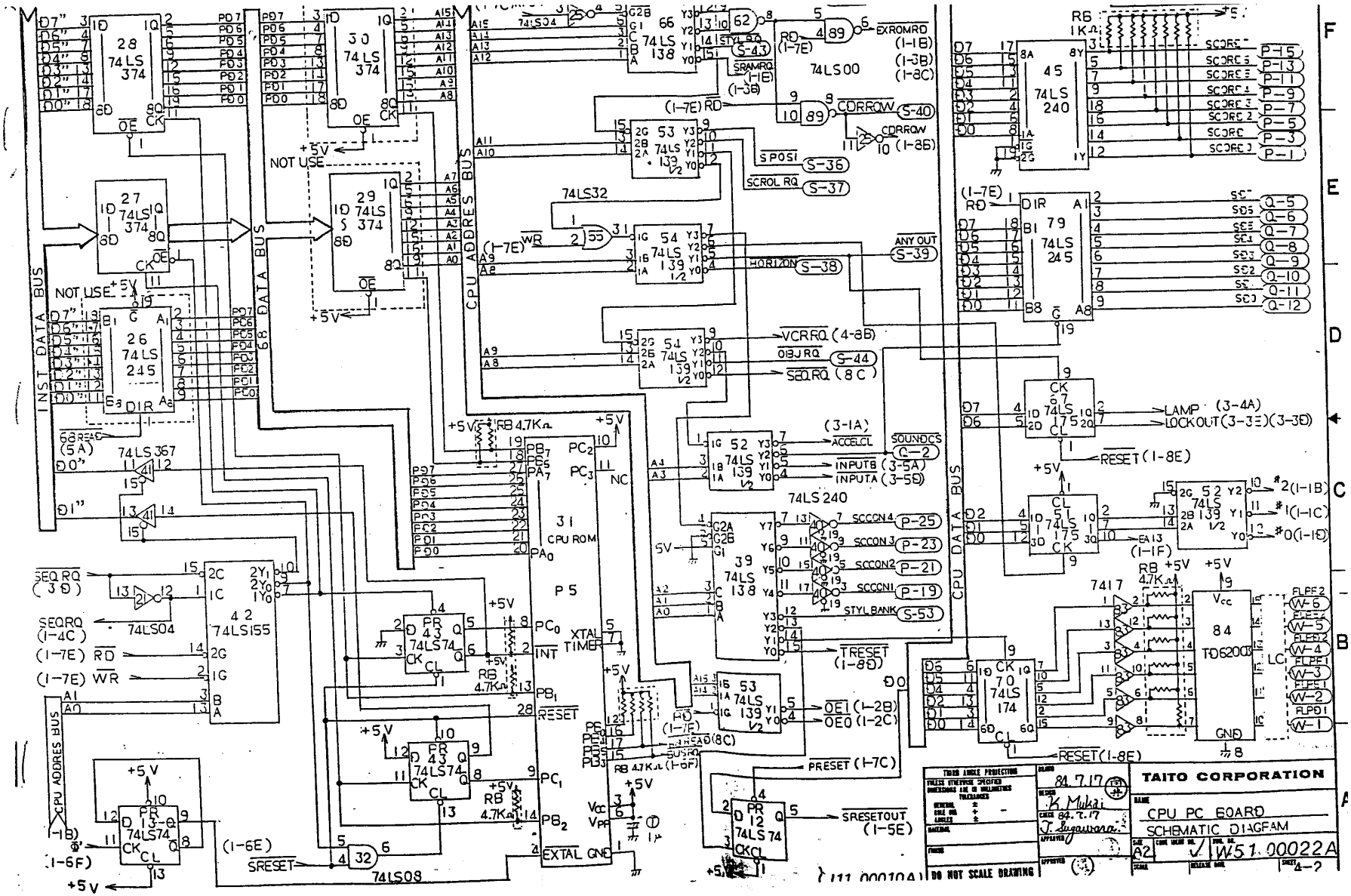
TAITO CORPORATION
CPU PC BOARD
SCHEMATIC DIAGRAM
W51 00022A
DO NOT SCALE DRAWING
84.7.17
K. Mukai
J. Sugawara
INST DATA BUS
DATA BUS
CPU ADDRES BUS
CPU DATA BUS
74LS 374
74LS 245
74LS 367
74LS155
74LS04
74LS08
74LS32
74LS00
74LS 240
74LS 138
74LS 139
74LS 174
74LS 175
74LS74
TD6200
CPU ROM
NOT USE
EXROMRD
CORROW
SPOSI
SCROL RQ
ANY OUT
HORIZON
VCRRQ
OBJRQ
SEQRQ
SOUNDCS
ACCELCL
INPUTB
INPUTA
SCCON4
SCCON3
SCCON2
SCCON1
STYLBANK
TRESET
PRESET
SRESETOUT
LAMP
LOCKOUT
RESET
SRESET
XTAL
TIMER
INT
EXTAL GND
GND
Vcc
FLPF2
FLPF1
FLPD1
LC1

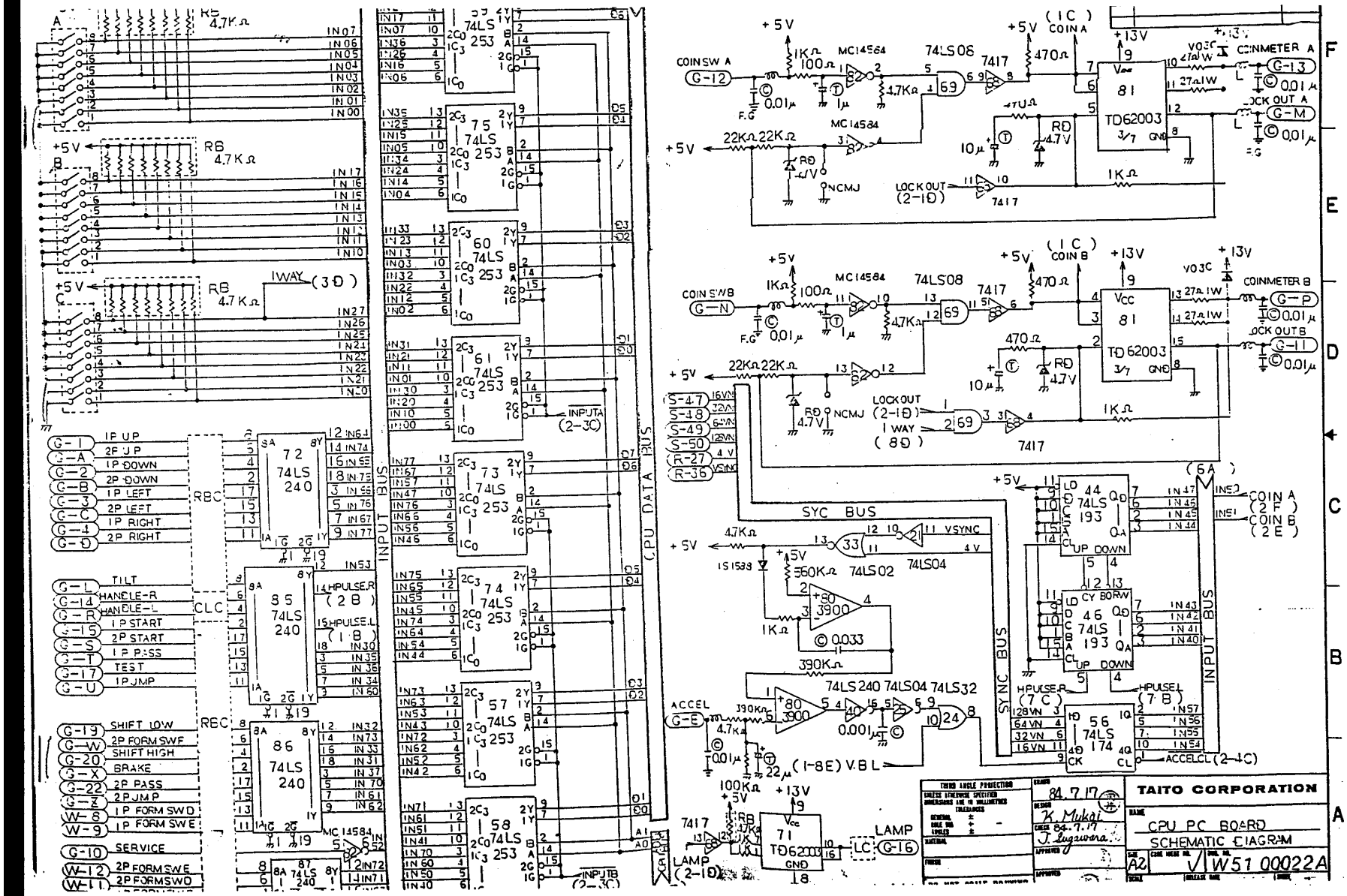
TAITO CORPORATION
CPU PC BOARD
SCHEMATIC DIAGRAM
W51 00022A
A2
84.7.17
K. Mukai
J. Fujiwara
INPUT BUS
CPU DATA BUS
SYC BUS
SYNC BUS
COIN SW A
COIN SW B
COIN A
COIN B
COINMETER A
COINMETER B
LOCK OUT A
LOCK OUT B
LOCK OUT
LAMP
ACCEL
HPULSE.R
HPULSE.L
INPUTA
INPUTB
74LS 240
74LS 253
74LS 193
74LS 174
74LS08
74LS02
74LS04
74LS32
MC14584
TD62003
7417
RB 4.7KΩ
1WAY (3D)

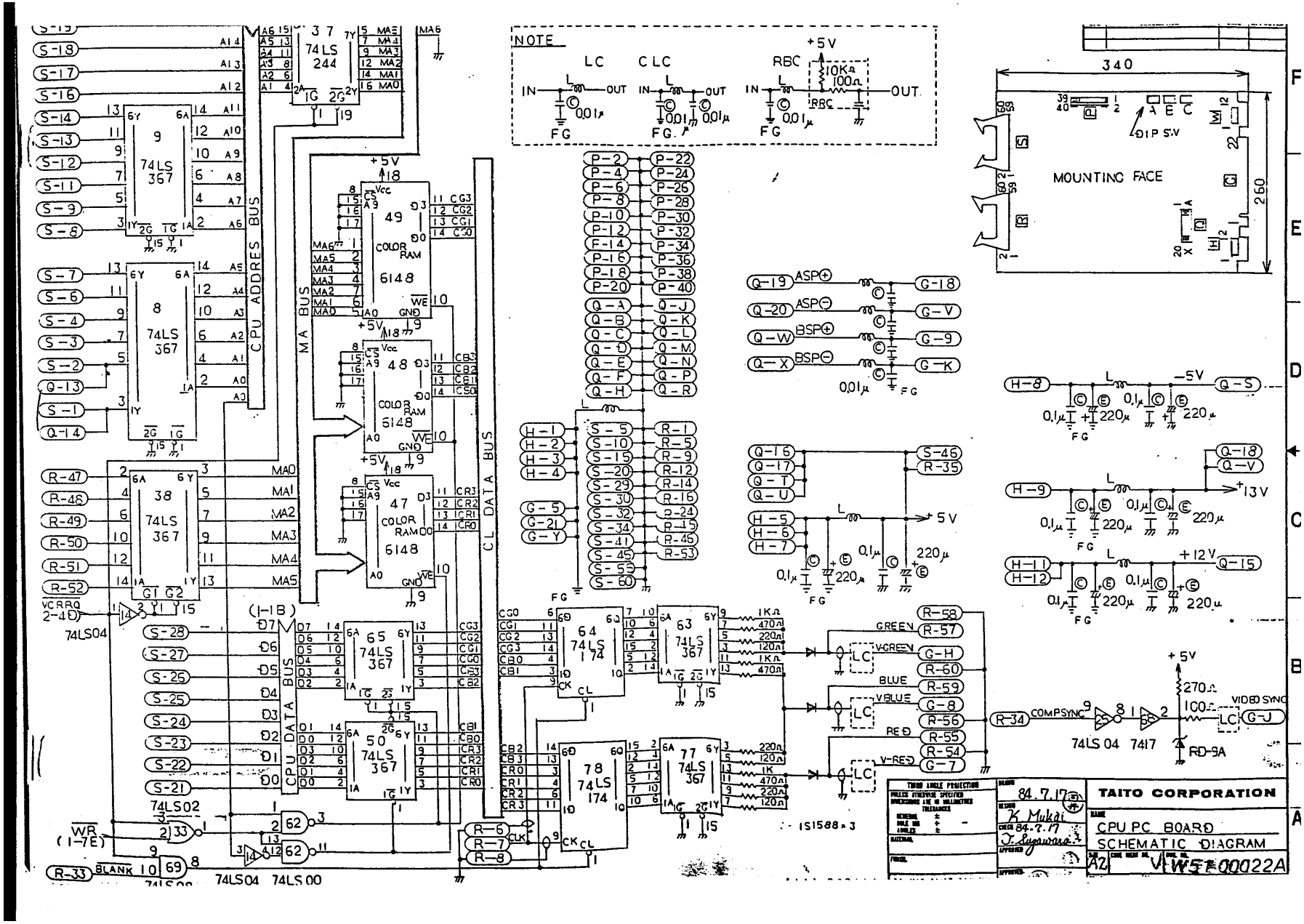
NOTE
LC
CLC
RBC
+5V
10KΩ
100Ω
IN
OUT
FG
0.01μ
74LS 244
74LS 367
74LS 174
74LS 04
74LS 00
74LS 02
74LS 7417
CPU ADDRES BUS
MA BUS
CL DATA BUS
CPU DATA BUS
COLOR RAM 6148
MOUNTING FACE
340
260
DIP SW
TAITO CORPORATION
CPU PC BOARD
SCHEMATIC DIAGRAM
84.7.17
K. Mukai
T. Sugawara
A2
V-W5T00022A

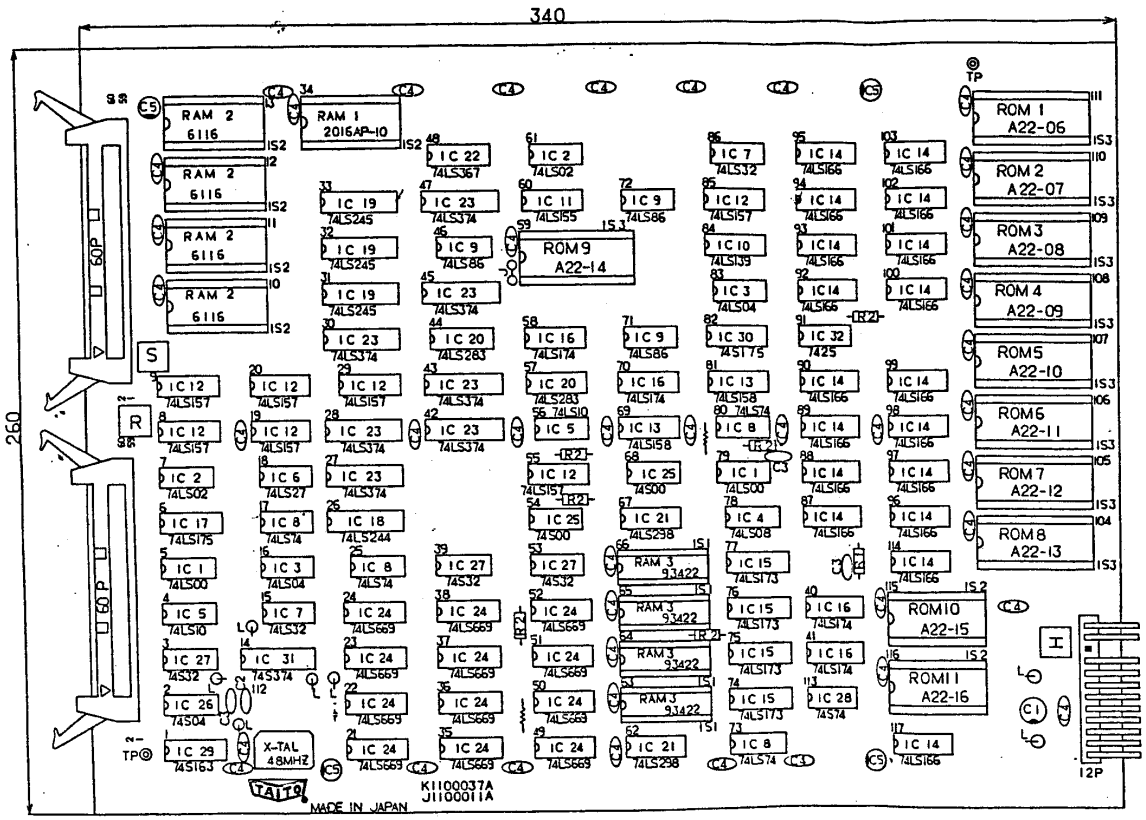

CATHODE

ELEC. BLOCK.

CAP. CERAMIC

NOTE.1 SYMBOL MARK

NOTE.2 BEADS FILTER

76					
75					
74					
73					
72					
71	X-TAL	A90 00120 A	X-TAL MODULE 48MHZ OSC	1	J
70					
69	T P	C06 00403 A	TEST POINT CHIP L=7.8	2	
68					
67	IS 3	C05 50080 A	I C SOCKET 28 P	9	
66	IS 2	50072 A	〃 24 P	7	
65	IS 1	C05 50061 A	I C SOCKET 22P	4	
64					
63	60P	C05 10566 A	ANGLE PIN HEADER 60P MIL	2	
62	12P	C05 00034 A	POST HEADER 5272-12	1	H
61					
60	L	C11 01201 A	BEADS FILTER	7	
59					
58	R 2	B20 00065 A	RES. CARBON 1K OHM ¼w ±5%	56	
57	R 1	B20 00057 A	RES. CARBON 470 OHM ¼w ±5%	1	
56	ROM 1	B20 01145 A	P-ROM A22-16 (2732)	1	
55	ROM 2	〃 1144 A	〃 15 (2732)	1	
54	ROM 3	〃 1143 A	〃 14 (2764)	1	
53	ROM 4	〃 1142 A	〃 13 (27128)	1	
52	ROM 7	〃 1141 A	〃 12	1	G
51	ROM 6	〃 1140 A	〃 11	1	
50	ROM 5	〃 1139 A	〃 10	1	
49	ROM 4	〃 1138 A	〃 09	1	
48	ROM 3	〃 1137 A	〃 08	1	
47	ROM 2	〃 1136 A	〃 07	1	
46	ROM 1	B20 01135 A	P-ROM A22-06 (27128)	1	
45					
44	RAM 3	B11 X0006 A	S-RAM 93422	4	
43	RAM 2	B10 X0019 A	〃 6116 P-3	4	F
42	RAM 1	B10 X0019 C	S-RAM 2016(100ns)	1	
41					
40	IC32	B03 X0025 A	T T L I C 7425	1	
39	IC31	B02 X0374 A	T T L S I C 74S374	1	
38	IC30	B1 X0175 A	〃 175	1	
37	IC29	〃 X0153 A	〃 163	1	
36	IC28	〃 X0074 A	〃 74	1	
35	IC27	〃 X0032 A	〃 32	3	
34	IC26	〃 X0004 A	〃 04	1	
33	IC25	B02 X0000 A	T T L S I C 74S00	2	E
32					
31	IC24	B01 X0669 A	T T L LS I C 74LS669	12	
30	IC23	〃 X0374 A	〃 374	7	
29	IC22	〃 X0367 A	〃 367	1	
28	IC21	〃 X0298 A	〃 298	2	
27	IC20	〃 X0283 A	〃 283	2	
26	IC19	〃 X0245 A	〃 245	3	
25	IC18	〃 X0244 A	〃 244	1	
24	IC17	〃 X0175 A	〃 175	1	D
23	IC16	〃 X0174 A	〃 174	4	
22	IC15	〃 X0173 A	〃 173	4	
21	IC14	〃 X0166 A	〃 166	18	
20	IC13	〃 X0158 A	〃 158	2	
19	IC12	〃 X0157 A	〃 157	7	
18	IC11	〃 X0155 A	〃 155	1	
17	IC10	〃 X0139 A	〃 139	1	
16	IC9	〃 X0086 A	〃 86	3	
15	IC8	〃 X0074 A	〃 74	4	C
14	IC7	〃 X0032 A	〃 32	2	
13	IC6	〃 X0027 A	〃 27	1	
12	IC5	〃 X0010 A	〃 10	2	
11	IC4	〃 X0008 A	〃 08	1	
10	IC3	〃 X0004 A	〃 04	2	
9	IC2	〃 X0002 A	〃 02	2	
8	IC1	B01 X0000 A	T T L LS I C 74LS00	2	
7	C5	A10 00131 A	CAP. ELEC. BLOCK 16VB 100	4	
6	C4	A12 00317 A	CAP. CERAMIC 50V100000P	41	
5	C3	〃 00245 A	〃 50V100P	3	B
4	C2	A12 00241 A	CAP. CERAMIC 50V68P	1	
3	C1	A10 00135 A	CAP. ELEC. BLOCK 16VB 220	1	
2					
1		J11 00011 A	OBJ PC. BOARD	1	

S or F IC

LS or ALS IC

PARTS LIST

TAITO CORPORATION

OBJ PC. BOARD Assy. A

K1100037A

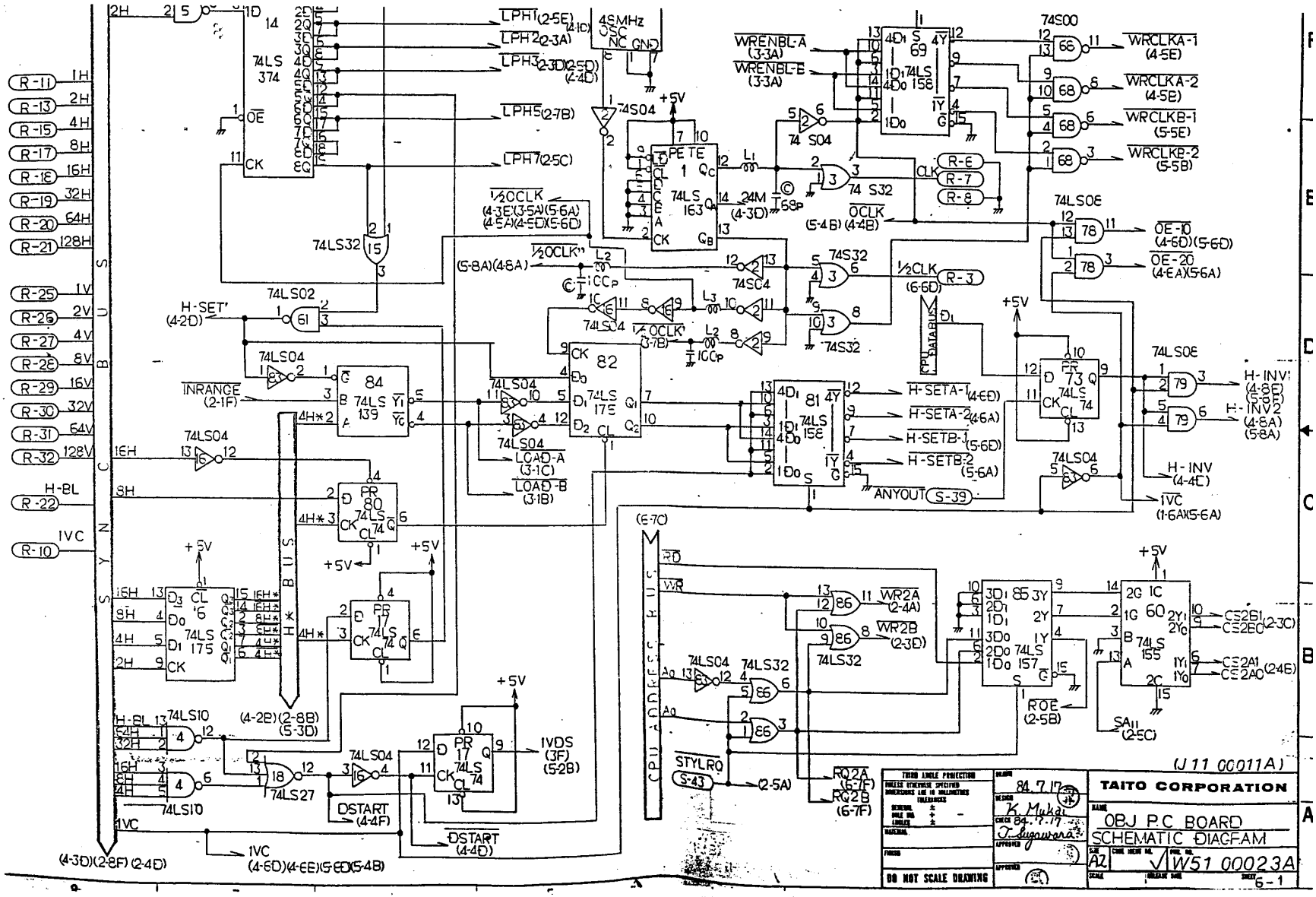
TAITO CORPORATION
OBJ P.C BOARD
SCHEMATIC DIAGRAM
W51 00023A
(J 11 00011A)
DO NOT SCALE DRAWING
K. Mukai
T. Sugawara
84.7.17
A2
6-1
74LS 374
74LS32
74LS02
74LS04
74LS 139
74LS 175
74LS 163
74LS 158
74LS 69
74LS 81
74LS 157
74LS 155
74LS 74
74LS10
74LS27
74S00
74S04
74S32
74LS00
74LS08
4SMHz OSC
PETE 1
82
84
80
17
73
6
60
86
68
78
79
R-11
R-13
R-15
R-17
R-18
R-19
R-20
R-21
R-25
R-26
R-27
R-28
R-29
R-30
R-31
R-32
R-22
R-10
R-3
R-6
R-7
R-8
H-SET'
INRANGE
LOAD-A
LOAD-B
H-SETA-1
H-SETA-2
H-SETB-1
H-SETB-2
ANYOUT
H-INV1
H-INV2
H-INV
IVC
IVDS
DSTART
STYLRQ
RQ2A
RQ2B
WR2A
WR2B
ROE
CS2B1
CS2B0
CS2A1
CS2A0
SA11
WRCLKA-1
WRCLKA-2
WRCLKB-1
WRCLKB-2
WRENBL-A
WRENBL-B
OCLK
½OCLK
½CLK
OE-10
OE-20
LPH1
LPH2
LPH3
LPH5
LPH7
CPU ADDRESS BUS
DATA BUS
SYS BUS

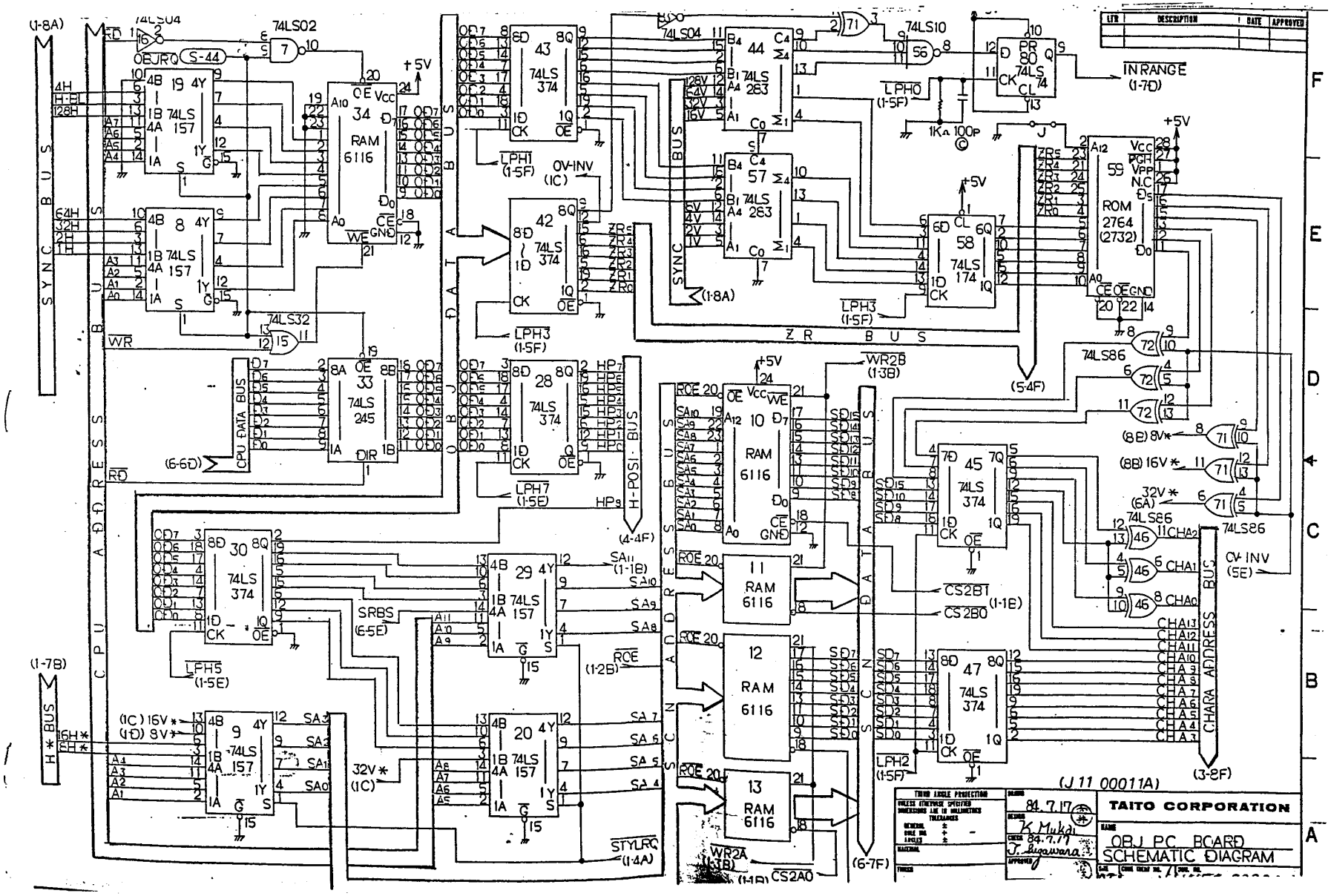
TAITO CORPORATION
OBJ PC BOARD
SCHEMATIC DIAGRAM
(J 11 00011A)
84.7.17
K. Mukai
84.7.17
J. Iwawara
CPU ADDRESS BUS
CPU DATA BUS
SYNC BUS
ZR BUS
H-POSI BUS
CHARA ADDRESS BUS
CPU ADDRESS SCAN
DATA SCAN
74LS157
74LS374
74LS245
74LS283
74LS174
74LS86
74LS32
74LS04
74LS02
74LS10
RAM 6116
ROM 2764 (2732)
IN RANGE
(1-7D)
LPH0
(1-5F)
LPH1
(1-5F)
LPH3
(1-5F)
LPH7
(1-5E)
LPH5
(1-5E)
LPH2
(1-5F)
0V-INV
(1C)
0V-INV
(5E)
WR2B
(1-3B)
CS2B1
(1-1E)
CS2B0
ROE
(1-2B)
SRBS
(6-5E)
STYLRQ
(1-4A)
WR2A
(1-3B)
CS2A0
(1-1B)
(1-8A)
(1-7B)
(6-6D)
(4-4F)
(5-4F)
(6-7F)
(3-8F)
(6A)
(8B) 8V*
(8B) 16V*
32V*
(1C) 16V*
(1D) 8V*
32V*
(1C)
+5V
1KΩ 100P

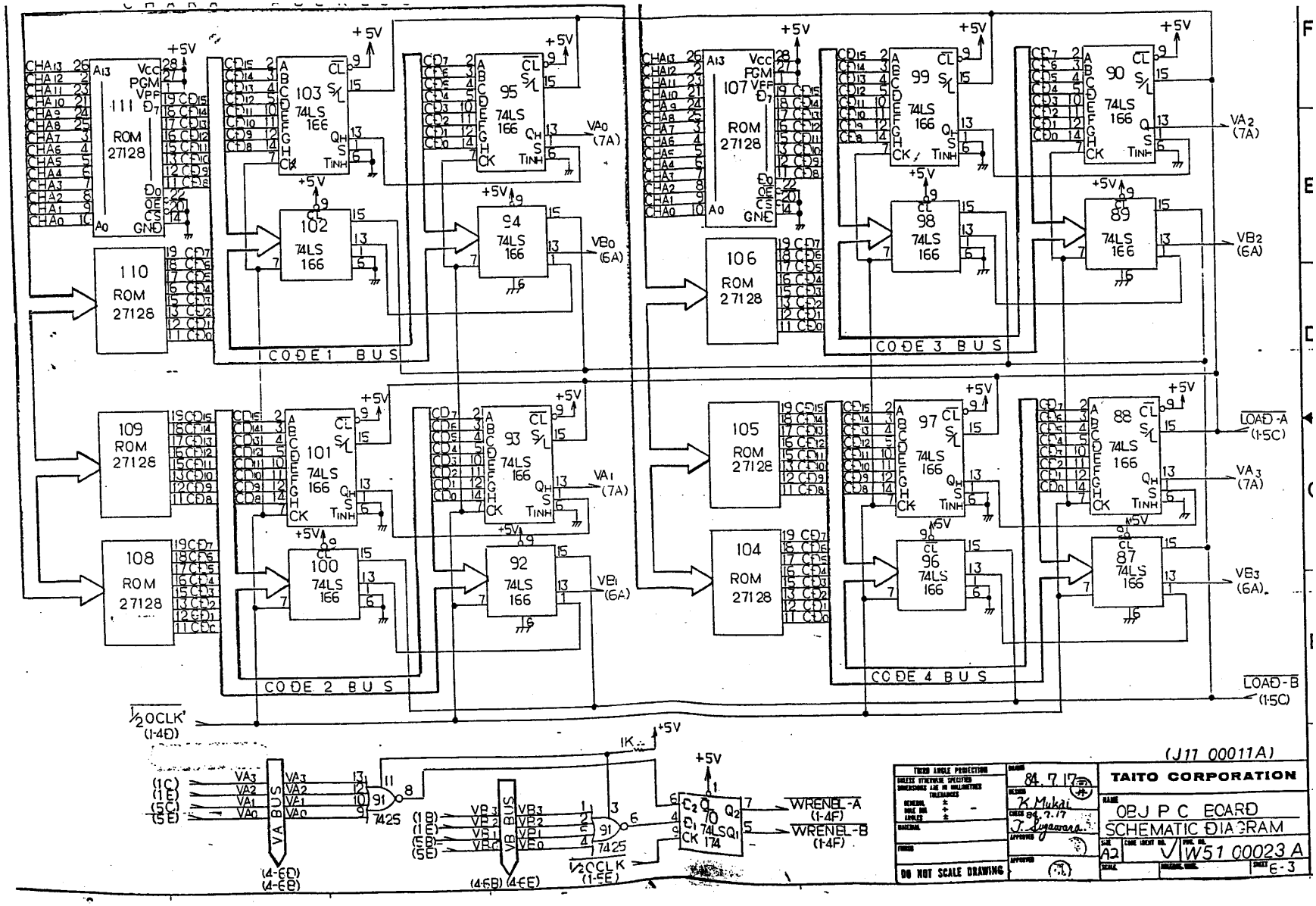
CODE 1 BUS
CODE 2 BUS
CODE 3 BUS
CODE 4 BUS
110 ROM 27128
109 ROM 27128
108 ROM 27128
111 ROM 27128
107 ROM 27128
106 ROM 27128
105 ROM 27128
104 ROM 27128
103 74LS 166
102 74LS 166
101 74LS 166
100 74LS 166
95 74LS 166
94 74LS 166
93 74LS 166
92 74LS 166
99 74LS 166
98 74LS 166
97 74LS 166
96 74LS 166
90 74LS 166
89 74LS 166
88 74LS 166
87 74LS 166
VA0 (7A)
VB0 (6A)
VA1 (7A)
VB1 (6A)
VA2 (7A)
VB2 (6A)
VA3 (7A)
VB3 (6A)
LOAD-A (1-5C)
LOAD-B (1-5C)
½OCLK' (1-4D)
½CCLK (1-5E)
WRENEL-A (1-4F)
WRENEL-B (1-4F)
VA BUS
VB BUS
7425
74LS 174
(J11 00011A)
TAITO CORPORATION
OBJ P C BOARD
SCHEMATIC DIAGRAM
W51 00023 A
DO NOT SCALE DRAWING
84. 7. 17
K. Mukai
J. Iyawara
A2
6-3

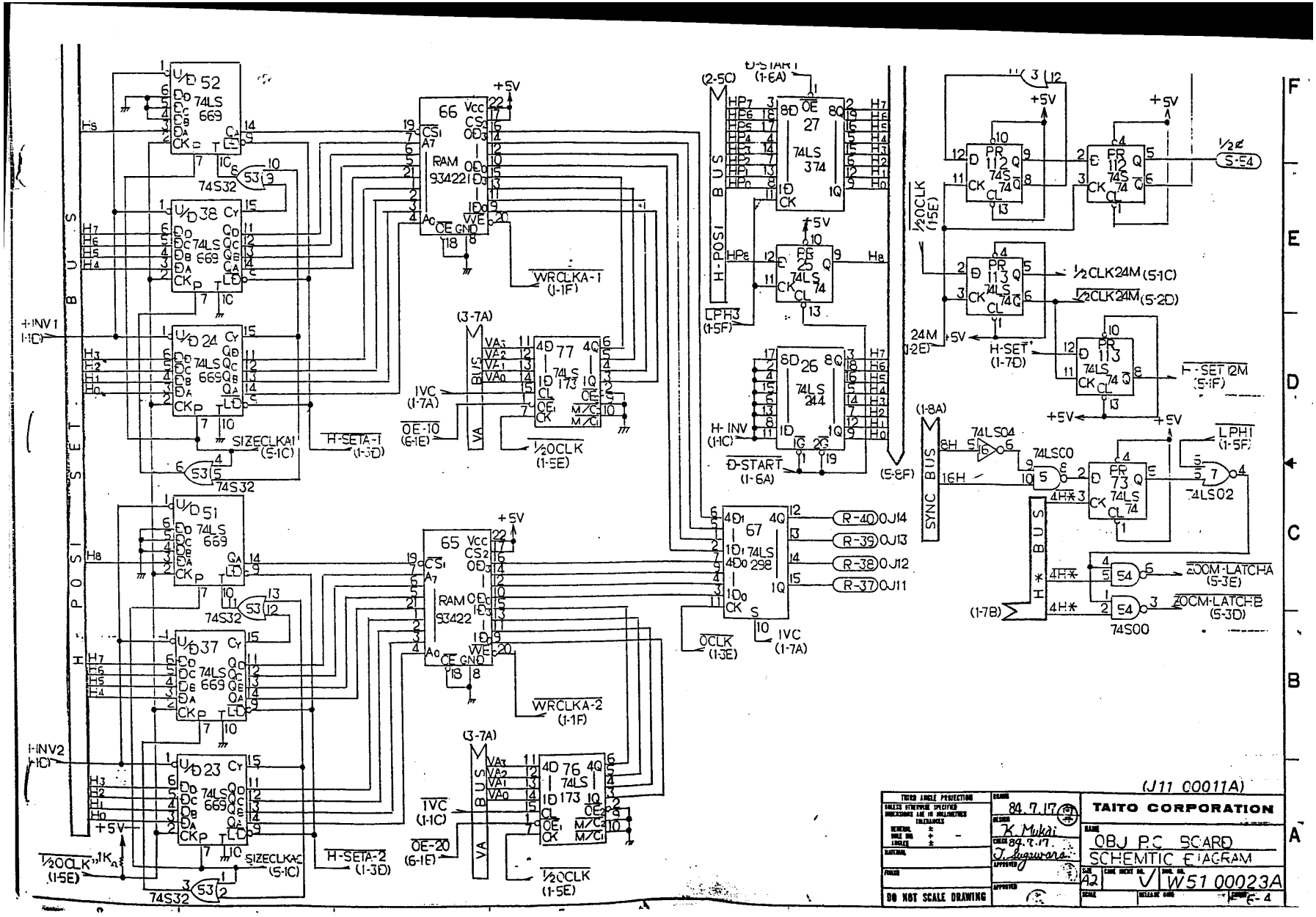
(J11 00011A)
TAITO CORPORATION
OBJ P.C. BOARD
SCHEMTIC DIAGRAM
W51 00023A
84.7.17
K. Mukai
84.7.17
T. Inguwara
DO NOT SCALE DRAWING
THIRD ANGLE PROJECTION
74S32
74LS 669
74LS 374
74LS 244
74LS 298
74LS 173
74LS 112
74LS 113
74LS 73
74LS04
74LS00
74LS02
RAM 93422
WRCLKA-1 (1-1F)
WRCLKA-2 (1-1F)
H-SETA-1 (1-3D)
H-SETA-2 (1-3D)
SIZECLKA1 (5-1C)
SIZECLKA2 (5-1C)
1VC (1-7A)
1VC (1-1C)
OE-10 (6-1E)
OE-20 (6-1E)
½OCLK (1-5E)
½OCLK (15E)
½CLK24M (5-1C)
½CLK24M (5-2D)
H-SET 12M (5-1F)
H-SET (1-7D)
LPH1 (1-5F)
LPH3 (1-5F)
D-START (1-6A)
H-INV (1-1C)
OCLK (1-3E)
ZOOM-LATCHA (5-3E)
ZOOM-LATCHB (5-3D)
R-40 0J14
R-39 0J13
R-38 0J12
R-37 0J11
+INV1 (1-1C)
+INV2 (1-1C)
H-POSI BUS
SYNC BUS
H* BUS
+5V

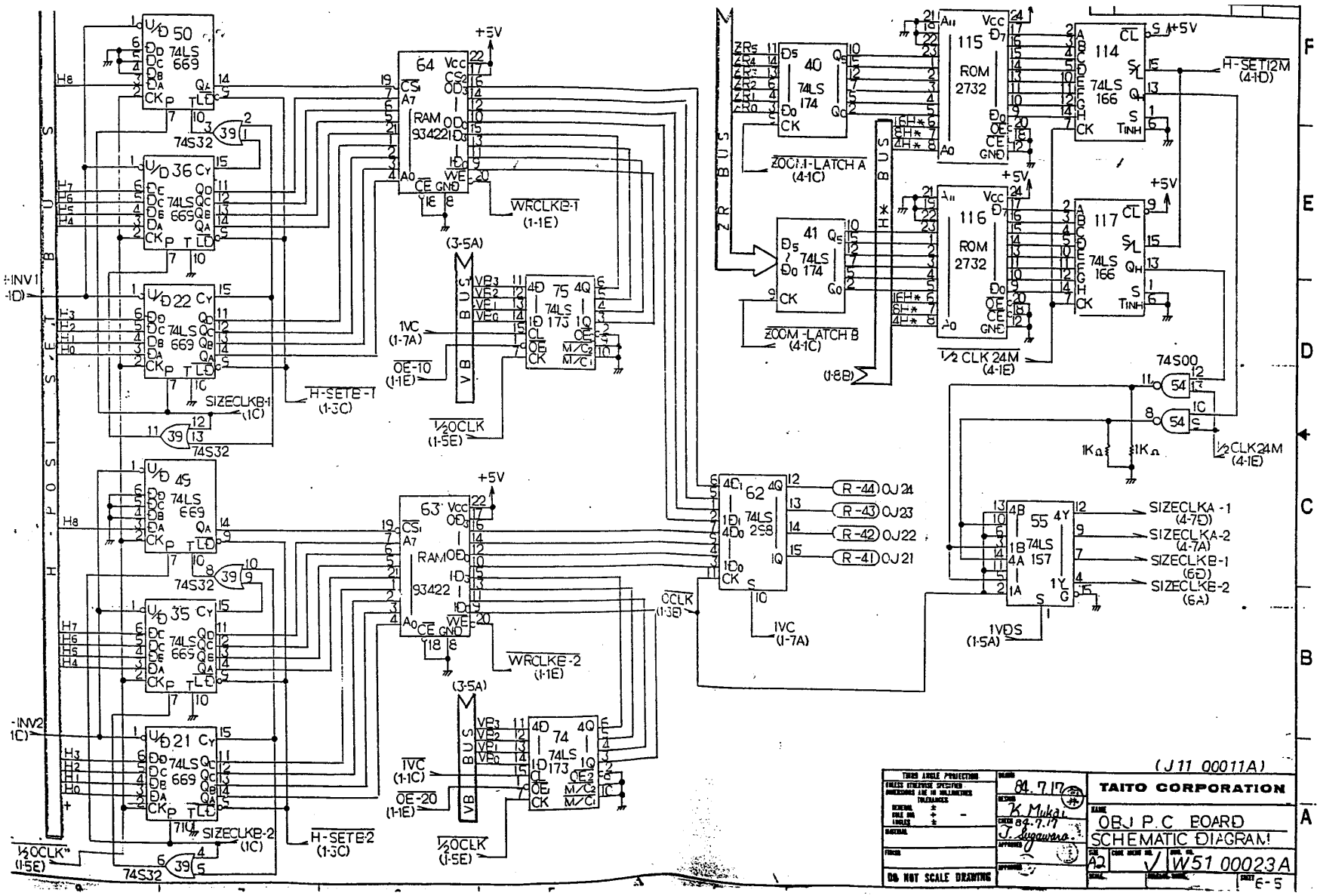
TAITO CORPORATION
OBJ P.C BOARD
SCHEMATIC DIAGRAM
(J11 00011A)
W51 00023A
DO NOT SCALE DRAWING
84.7.17
K. Mukai
J. Sugawara
74LS 669
74S32
RAM 93422
74LS 173
74LS 174
ROM 2732
74LS 166
74S00
74LS 258
74LS 157
ZOOM-LATCH A (4-1C)
ZOOM-LATCH B (4-1C)
H-SET12M (4-1D)
1/2 CLK 24M (4-1E)
SIZECLKA-1 (4-7D)
SIZECLKA-2 (4-7A)
SIZECLKB-1 (6D)
SIZECLKB-2 (6A)
WRCLKB-1 (1-1E)
WRCLKB-2 (1-1E)
H-SETB-1 (1-3C)
H-SETB-2 (1-3C)
SIZECLKB-1 (1C)
SIZECLKB-2 (1C)
1/2OCLK (1-5E)
OCLK (1-3B)
1VC (1-7A)
1VDS (1-5A)
OE-10 (1-1E)
OE-20 (1-1E)
R-44 0J24
R-43 0J23
R-42 0J22
R-41 0J21
+5V

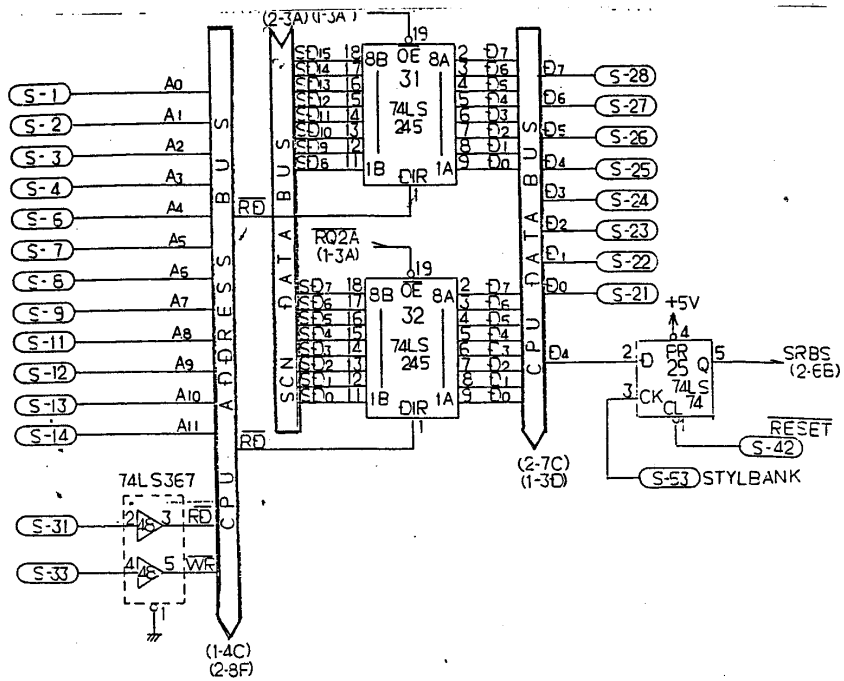

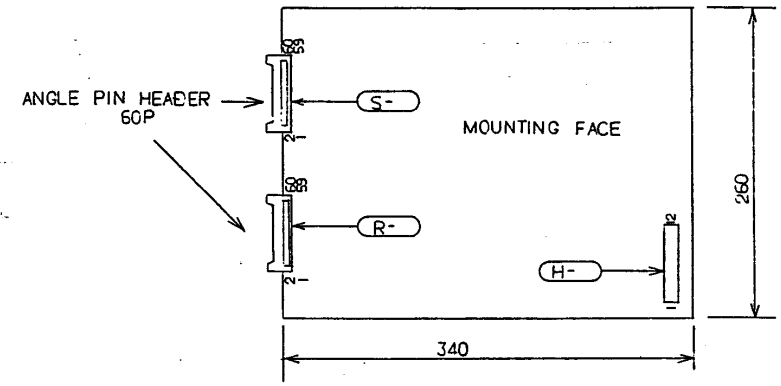

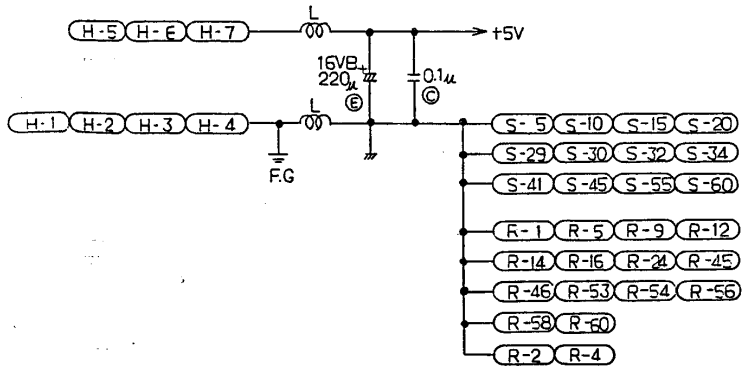

(J11 00011A)

THIRD ANGLE PROJECTION UNLESS OTHERWISE SPECIFIED DIMENSIONS ARE IN MILLIMETRES TOLERANCES	84.7.17	TAITO CORPORATION
	K. Mukai	NAME JBJ P.C.BOARD
	CHECK 84.7.17 T. Inoguwara	SCHEMATIC DIAGRAM
	SIZE A2	W51 00023A

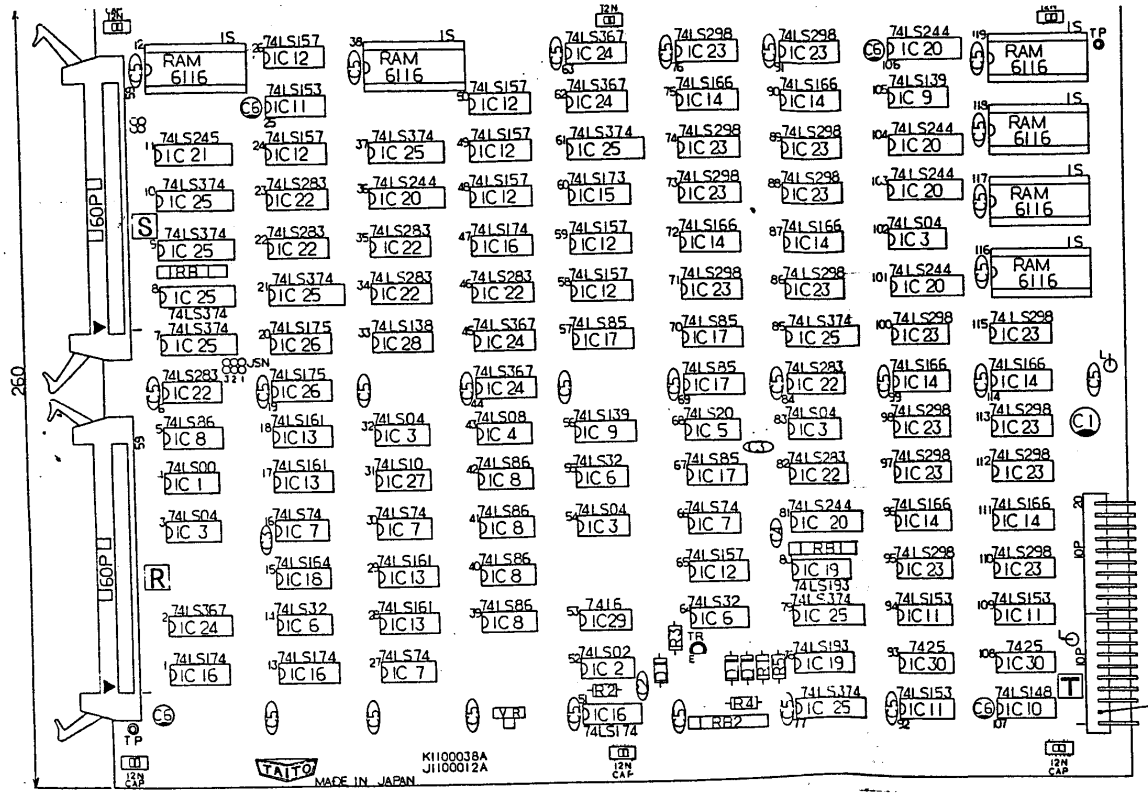

71	12N	E9000440A	CIRCUIT BOARD STACKING SPACER		6
69	CAP	E9000675A	CAPPING BUTTON MB-1156		6
68	40N	E9000449A	CIRCUIT BOARD STACKING SPACER		50
66	L	C110120 1A	BEADS FILTER ZBE503S	01TA	2
64	TP	C060044 40A	TEST POINT CHIP	T-78	2
62	IS	C0550072A	IC SOCKET	24P	6
60	60P	C0510566A	ANGLE PIN HEADER 60P MIL		2
57	10P	C0500032A	POST HEADER	5272-10	2
55	RAM	B10X0019A	S-RAM	6116 P3	6
53	IC1	B03X0025A	TTL	7425	2
52	IC2	B0IX0016A		7416	1
51	IC3	B0IX0138A		74LS138	1
50	IC4	B0IX0010A		10	1
49	IC5	B0IX0175A		175	2
48	IC6	B0IX0374A		374	10
47	IC7	B0IX0367A		367	5
46	IC8	B0IX0298A		298	15
45	IC9	B0IX0283A		283	8
44	IC10	B0IX0245A		245	1
43	IC11	B0IX0244A		244	5
42	IC12	B0IX0193A		193	2
41	IC13	B0IX0164A		164	1
40	IC14	B0IX0085A		85	4
39	IC15	B0IX0174A		174	4
38	IC16	B0IX0173A		173	1
37	IC17	B0IX0166A		166	8
36	IC18	B0IX0161A		161	4
35	IC19	B0IX0157A		157	8
34	IC20	B0IX0153A		153	4
33	IC21	B0IX0148A		148	1
32	IC22	B0IX0139A		139	2
31	IC23	B0IX0086A		86	5
30	IC24	B0IX0074A		74	4
29	IC25	B0IX0032A		32	3
28	IC26	B0IX0020A		20	1
27	IC27	B0IX0008A		08	1
26	IC28	B0IX0004A		04	5
25	IC29	B0IX0002A		02	1
24	IC30	B0IX0000A	TTL	74LS00	1
22	RB4	A2239005A	RES. NETWORK	1530 Ω	1
21	RB1	A2231081A	RES. BLOCK	4.7K 9S	2
19	VR	A2102507A	VR	B-10K	1
17	R5	A2000093A	RES. CARBON	15K OHM 4W ±5%	1
16	R4	A2000081A		4.7K	1
15	R3	A2000065A		1K	1
14	R2	A2000043A		120	1
13	R1	A2000029A	RES. CARBON	33 OHM 4W ±5%	1
12	C5	A1000117A	ELEC. BLOCK	16VB100	4
11	C3	A2001317A	CAP. CERAMIC	50V104P	26
10	C4	A2002694A		50V102P	1
9	C3	A2002514A		50V180P	2
8	C2	A2002334A	CAP. CERAMIC	50V33P	1
7	C1	A1000135A	ELEC. BLOCK	16VB220	1
5	D	A2200048A	DIODE	1S1588	3
3	TR	A0100099A	TR	2SC1815	1
1		J1100012A	SCN PC BOARD		1

PARTS LIST

7.2.84

TAITO CORPORATION

SCN PC BOARD Assy

A1 K1100038A

COMMON MARK
RES. BLOCK
CATHODE MARK
DIODE
ELEC. BLOCK
CAP. CERAMIC

NOTE 1. SYMBOL MARK

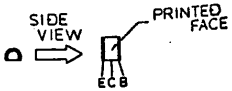

NOTE 2. TR (2SC1815)

NOTE 3. BEADS FILTER

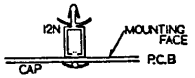

NOTE 4. CAPPING BUTTON & CIRCUIT BOARD STACKING SPACER

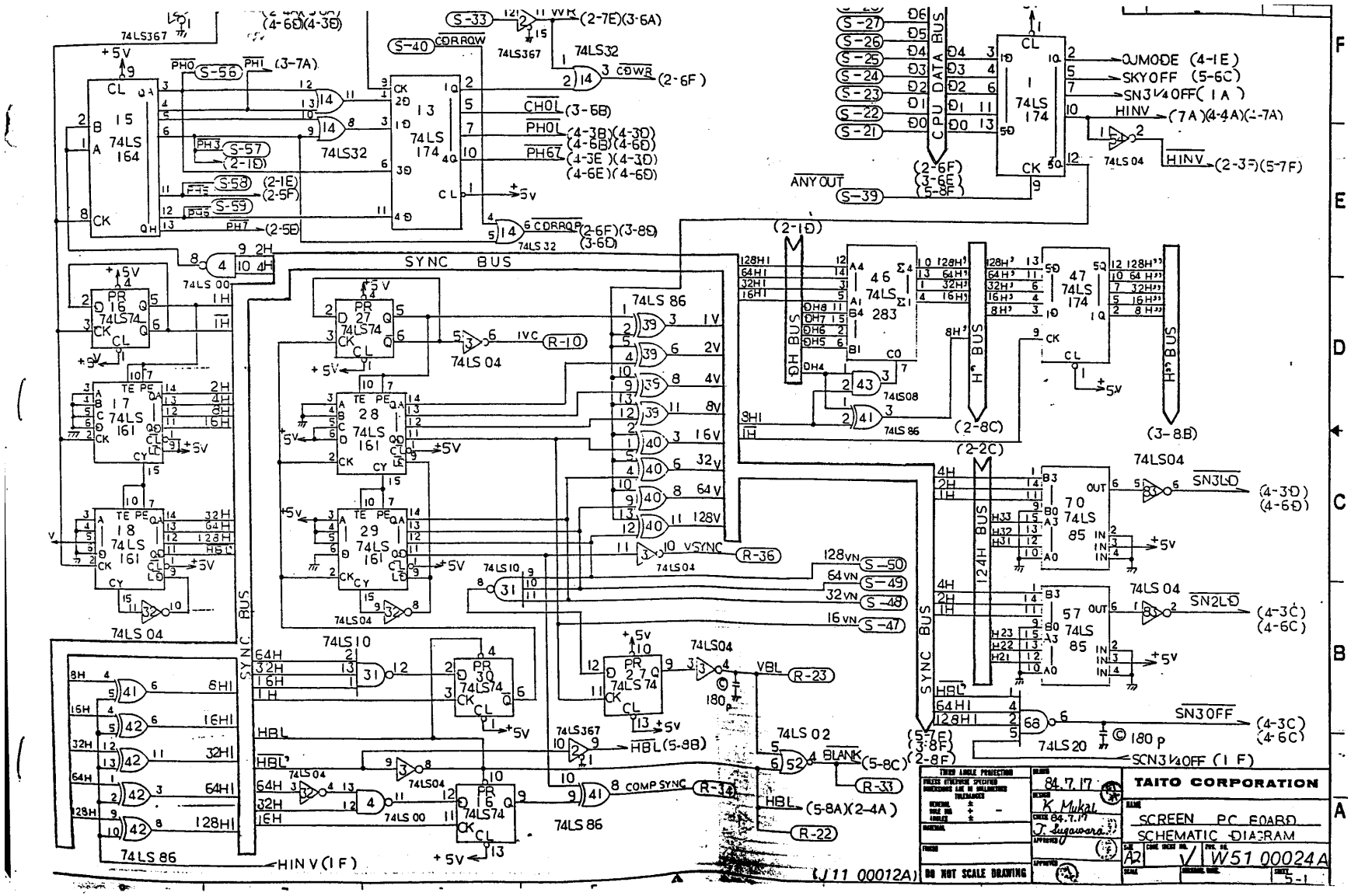
TAITO CORPORATION
SCREEN PC BOARD
SCHEMATIC DIAGRAM
W51 00024A
DO NOT SCALE DRAWING
(J11 00012A)
84.7.17
K. Mukai
J. Sugawara
A2
5-1
SYNC BUS
CPU DATA BUS
74LS 174
74LS 164
74LS 161
74LS 283
74LS 86
74LS 85
74LS 04
74LS 02
74LS 20
74LS 00
74LS 74
74LS 32
74LS 367
74LS 10
74LS 08
OJMODE (4-1E)
SKYOFF (5-6C)
SN3½OFF (1A)
HINV (7A)(4-4A)(1-7A)
HINV (2-3F)(5-7F)
SN3LD (4-3D) (4-6D)
SN2LD (4-3C) (4-6C)
SN3OFF (4-3C) (4-6C)
SCN3½OFF (1F)
HINV (1F)
HBL (5-9B)
BLANK (5-8C)
HBL (5-8A)(2-4A)
COMP SYNC
VSYNC
VBL
128VN
64VN
32VN
16VN
128V
64V
32V
16V
8V
4V
2V
1V
IVC
CDRRQW
CDWR
CDRRQR
CH01
PH01
PH67
ANY OUT
S-39
S-40
S-33
S-50
S-49
S-48
S-47
R-10
R-36
R-23
R-33
R-22
R-34

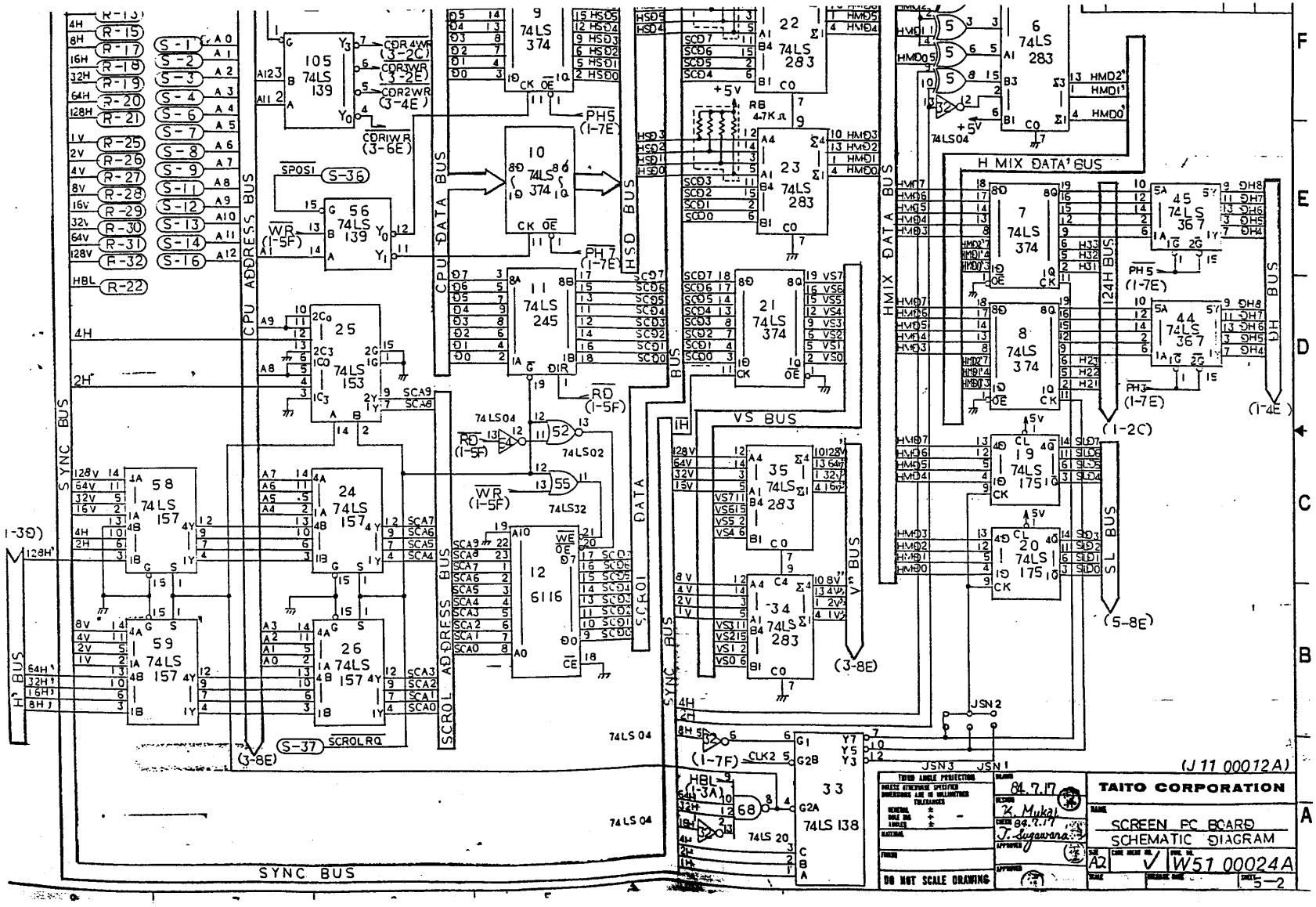
TAITO CORPORATION
SCREEN PC BOARD
SCHEMATIC DIAGRAM
W51 00024A
(J 11 00012A)
DO NOT SCALE DRAWING
84.7.17
K. Mukai
J. Sugawara
A2
5-2
SYNC BUS
CPU ADDRESS BUS
CPU DATA BUS
HSD BUS
DATA BUS
SCROL ADDRESS BUS
SCROL DATA BUS
HMIX DATA BUS
H MIX DATA BUS
VS BUS
V BUS
124H BUS
SL BUS
H BUS
105 74LS 139
56 74LS 139
25 74LS 153
58 74LS 157
24 74LS 157
59 74LS 157
26 74LS 157
9 74LS 374
10 74LS 374
11 74LS 245
12 6116
22 74LS 283
23 74LS 283
21 74LS 374
35 74LS 283
34 74LS 283
33 74LS 138
6 74LS 283
7 74LS 374
8 74LS 374
45 74LS 367
44 74LS 367
19 74LS 175
20 74LS 175
74LS04
74LS02
74LS32
74LS 20
SPOSI
WR
RD
PH5
PH7
PH3
CDR4WR
CDR3WR
CDR2WR
CDRIWR
SCROLRQ
CLK2
HBL
JSN1
JSN2
JSN3

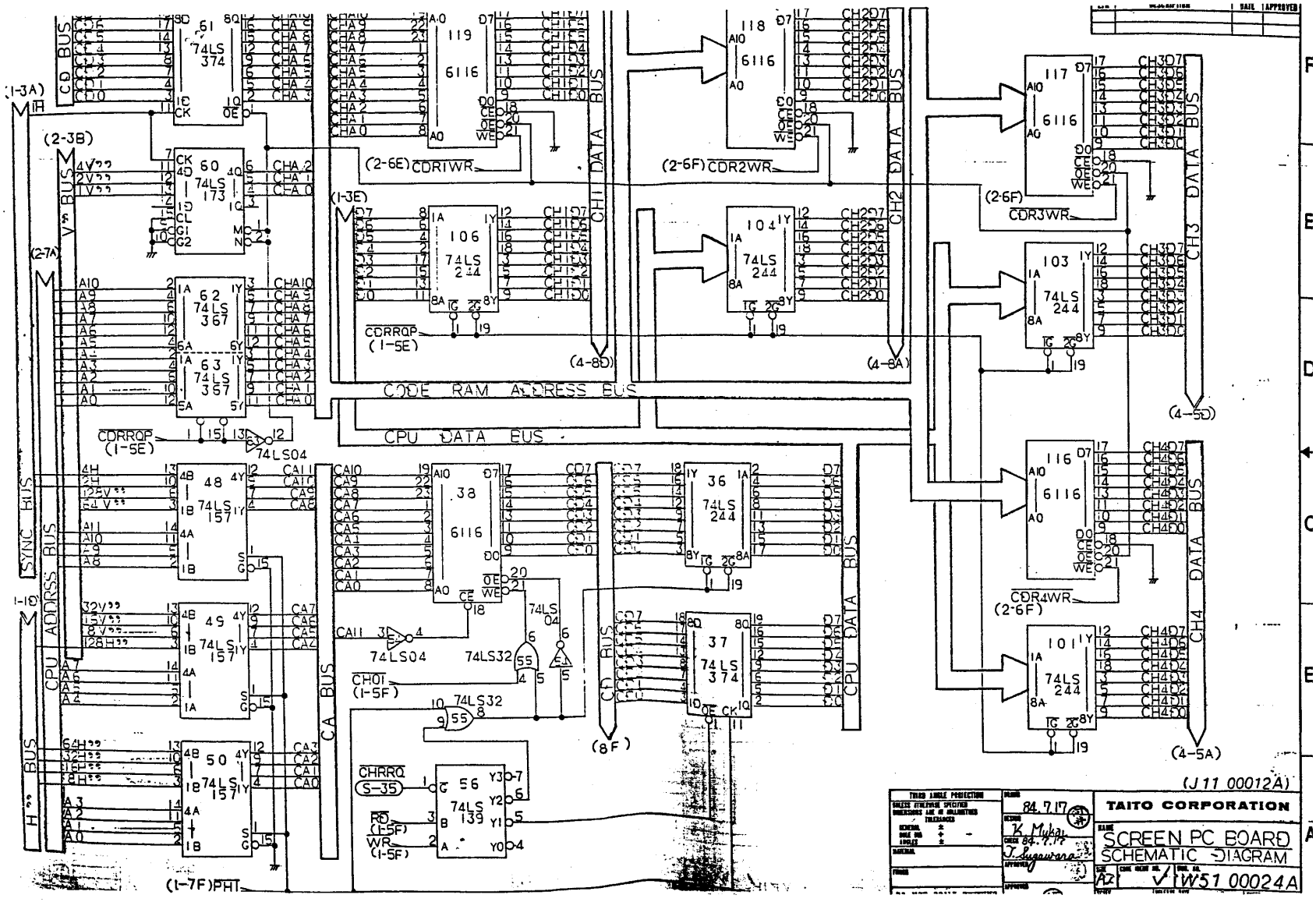
TAITO CORPORATION
SCREEN PC BOARD
SCHEMATIC DIAGRAM
(J11 00012A)
W51 00024A
84.7.17
CODE RAM ADDRESS BUS
CPU DATA BUS
CD BUS
CA BUS
CPU ADDRESS BUS
SYNC BUS
CH1 DATA BUS
CH2 DATA BUS
CH3 DATA BUS
CH4 DATA BUS
CPU DATA BUS
74LS 374
6116
74LS 173
74LS 367
74LS 244
74LS 157
74LS 139
74LS04
74LS32
CDR1WR
CDR2WR
CDR3WR
CDR4WR
CDRROP
CHRRQ
CHOI
RD
WR

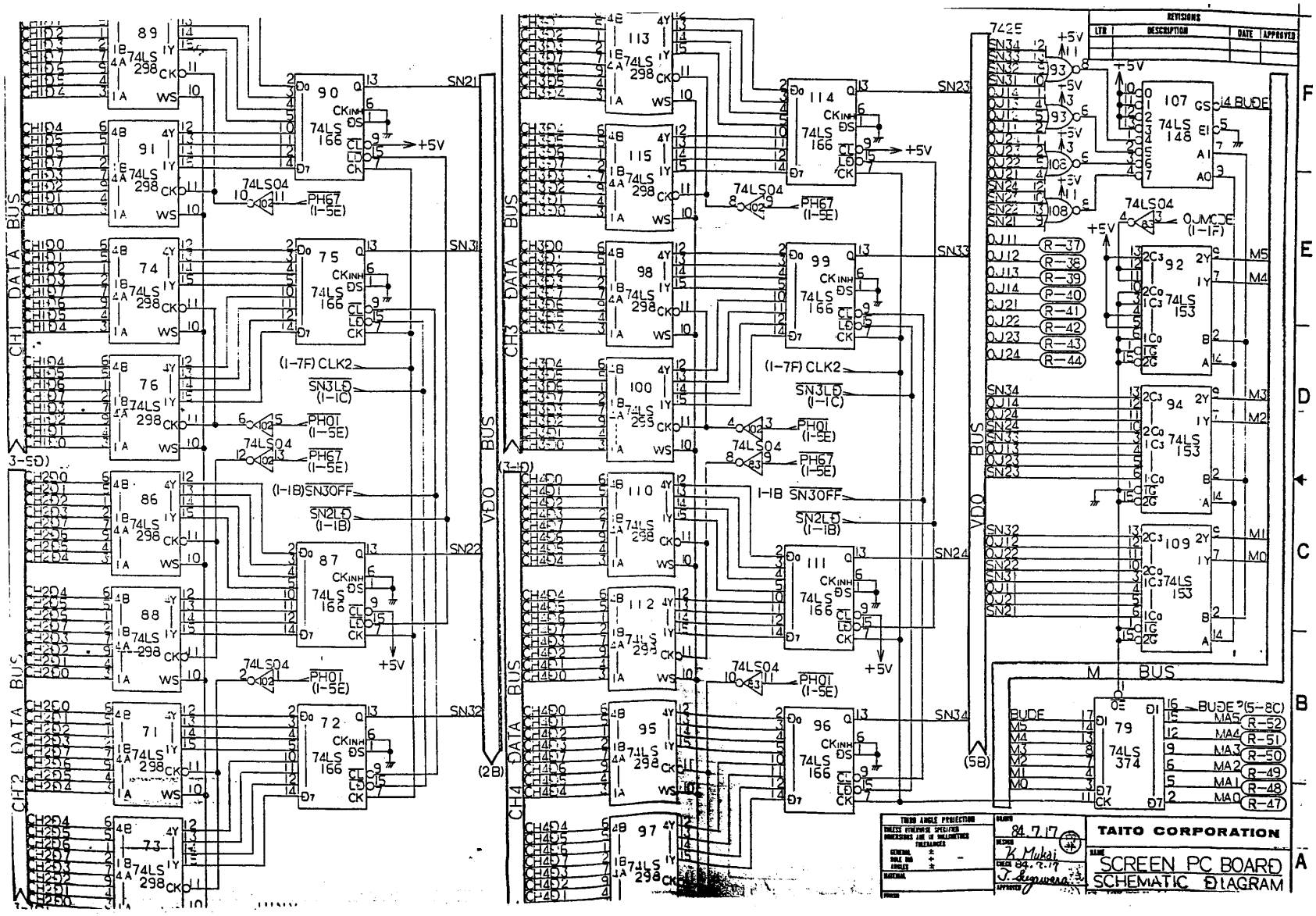
REVISIONS
LTR
DESCRIPTION
DATE
APPROVED
CH1 DATA BUS
CH2 DATA BUS
CH3 DATA BUS
CH4 DATA BUS
VDO BUS
M BUS
74LS 298
74LS 166
74LS 148
74LS 153
74LS 374
74LS04
74LS08
74LS93
74LS00
SN21
SN22
SN23
SN24
SN31
SN32
SN33
SN34
(1-7F) CLK2
SN3LD (1-1C)
(1-1B) SN30FF
SN2LD (1-1B)
PH01 (1-5E)
PH67 (1-5E)
OJMODE (1-1F)
BUDE
MA5
MA4
MA3
MA2
MA1
MA0
R-37
R-38
R-39
R-40
R-41
R-42
R-43
R-44
R-47
R-48
R-49
R-50
R-51
R-52
+5V
TAITO CORPORATION
SCREEN PC BOARD
SCHEMATIC DIAGRAM
THIRD ANGLE PROJECTION
84.7.17
B. Mukai
84.7.17

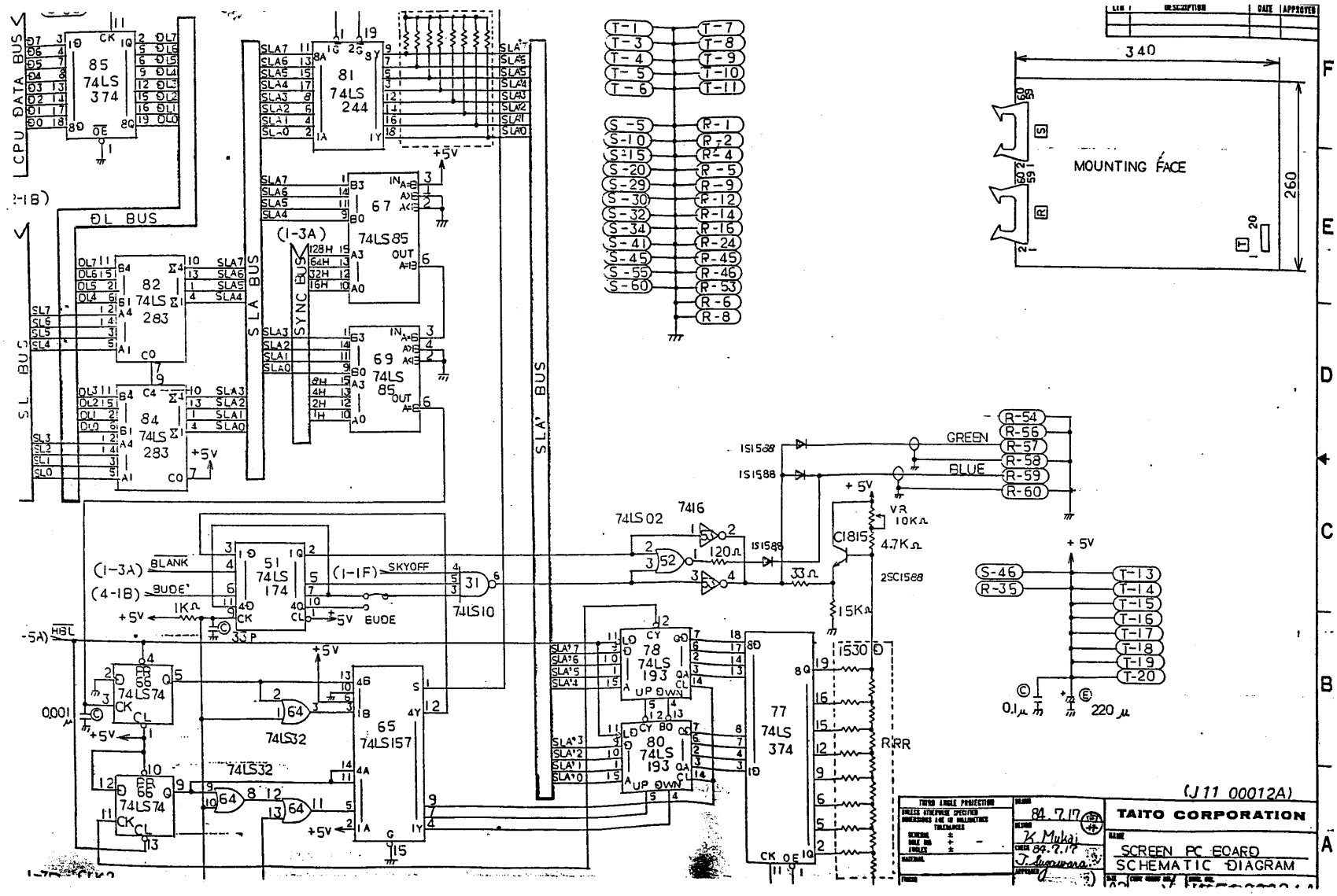
CPU DATA BUS
DL BUS
SL BUS
SLA BUS
SLA' BUS
SYNC BUS
85 74LS 374
81 74LS 244
67 74LS85
69 74LS 85
82 74LS 283
84 74LS 283
51 74LS 174
65 74LS157
66 74LS74
78 74LS 193
80 74LS 193
77 74LS 374
74LS02
74LS32
74LS10
7416
C1815
2SC1588
1S1588
MOUNTING FACE
340
260
GREEN
BLUE
TAITO CORPORATION
SCREEN PC BOARD
SCHEMATIC DIAGRAM
(J11 00012A)
84.7.17

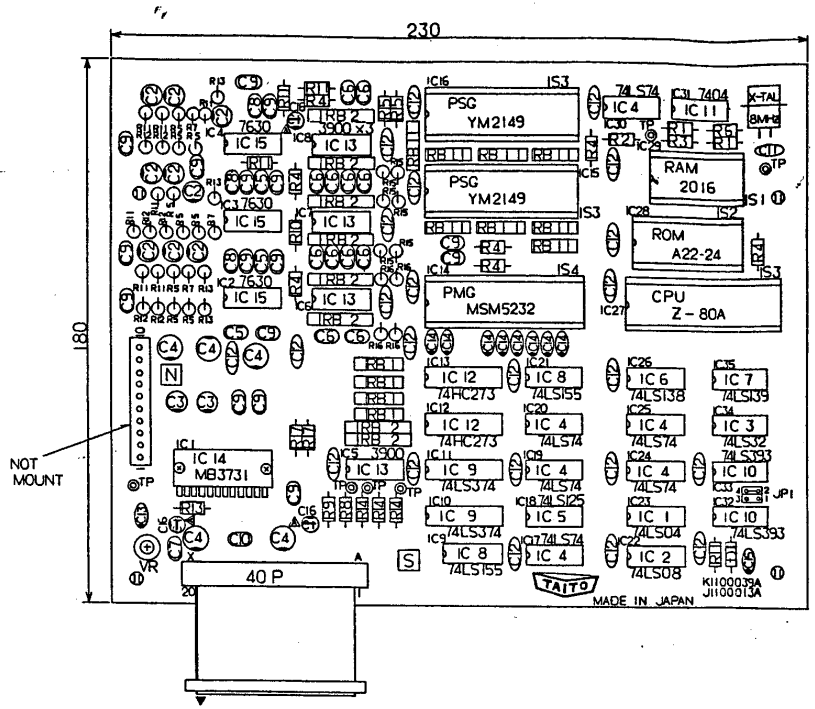

60	CBF90001 28A	LOCKING SUPPORT LCB-10		4	K
78	40FL50000 (BA	FLAT HARNESS 40P L=70		1	
76	TP	C0600403A	TEST POINT CHIP L=7.8	5	
74	IS4	C0550094A	IC SOCKET 42P	1	
73	IS3	C0550090A	40P	3	
72	IS2	C0550080A	28P	1	
71	IS1	C0550072A	IC SOCKET 24P	1	J
69	ROM	B2001153A	P-ROM A22-24 (27128)	1	
67	IC15	B1722731A	ATTENUATOR TA7630	3	
66	IC8	B1722011A	PMG MSM5232	1	
65	IC5	B1722008A	PSG YM2149	2	
64		P2600005A	FLANGE NUT M3	2	
63		P0600023A	PAN HD SCREW M3×10	2	
62	IC4	B1721606A	POWER AMP MB3731	1	H
61	IC13	B1720440A	OP-AMP LM3900	4	
60	IC9	B1010X0019A	S-RAM 2016	1	
59	IC1	B0908X0014A	CPU Z-80A	1	
58	IC12	B0707X2274A	C-MOS 74HC273	2	
57					
56	IC11	B0903X0004A	TTL IC 7404	1	
55	IC10	B0801X0039A	74LS393	2	
54	IC9	B0801X0037A	74LS374	2	
53	IC8	B0801X0055A	74LS55	2	
52	IC7	B0801X0039A	74LS139	1	G
51	IC6	B0801X0038A	74LS138	1	
50	IC5	B0801X0025A	74LS25	1	
49	IC4	B0801X0074A	74LS74	5	
48	IC3	B0801X0032A	74LS32	1	
47	IC2	B0801X0008A	74LS08	1	
46	IC1	B0801X0004A	TTL IC 74LS04	1	
45					
44	XTAL	A9000072A	X-TAL 8MHz	1	
43					
42	RB2	A2239009A	RES. NETWORK 1054C	8	F
41	RB1	A2239007A	RES. NETWORK 1530A	12	
40					
39	VR	A21024 11A	VR TM8K V2-IS B5KΩ	1	
38					
37	R17	A2000470A	RES. CARBON 10HM4W±5%	2	
36	R15	A2000135A	820OHM4W±5%	4	
35	R14	A2000131A	560K	8	
34	R14	A2000127A	390K	1	
33	R13	A2000113A	100K	5	E
32	R12	A2000100A	75K	5	
31	R11	A2000089A	10K	11	
30	R10	A2000085A	5.6K	1	
29	R9	A2000082A	5.1K	1	
28	R8	A2000081A	4.7K	1	
27	R7	A2000075A	2.7K	3	
26	R6	A2000071A	1.8K	1	
25	R5	A2000069A	1.5K	5	
24	R4	A2000065A	1K	7	D
23	R3	A2000059A	560	1	
22	R2	A2000051A	270	1	
21	R1	A2000049A	RES. CARBON 220OHM4W±5%	2	
▲ 20	C19	A1000169A	ELEC. BLOCK 25V810	3	
19	C18	A1000111A	TANT. DIP 35V22	1	
18	C14	A1000107A	35V1	8	
17	C13	A1000119A	TANT. DIP 25V10	1	
16	C12	A2000117A	CAP. CERAMIC 50V100000P	23	
15	C11	A2000229A	CERAMIC 50V22P	1	C
14	C10	A1000174A	FILM 50V015	1	
13	C9	A1000170A	50V01	16	
12	C8	A1000152A	50V0047	3	
11	C7	A1000147A	50V001	1	
10	C6	A1000139A	50V00047	12	
▲ AI 100136A 9	C5	A1000133A	CAP. FILM 50V00033	3	
8	C4	A1000135A	ELEC. BLOCK 16V8220	5	
7	C3	A1000131A	16V8100	2	
6	C2	A1000127A	16V847	9	
▲ 5	C1	A1000119A	ELEC. BLOCK 16V818	3	B
4					
3	D	A0200048A	DIODE 1S1588	1	
2					
1		KI100013A	SOUND PC BOARD	1	

PARTS LIST

TAITO CORPORATION

SOUND PC BOARD Assy

AI KI100039A

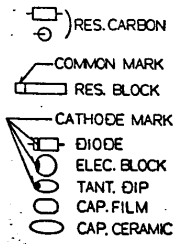

NOTE1. SYMBOL

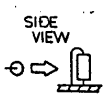

HOW TO MOUNT
NOTE2. RES. CARBON

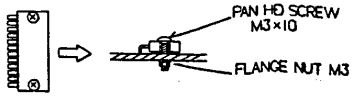

NOTE3. MB3731

NOTE.4 LCB

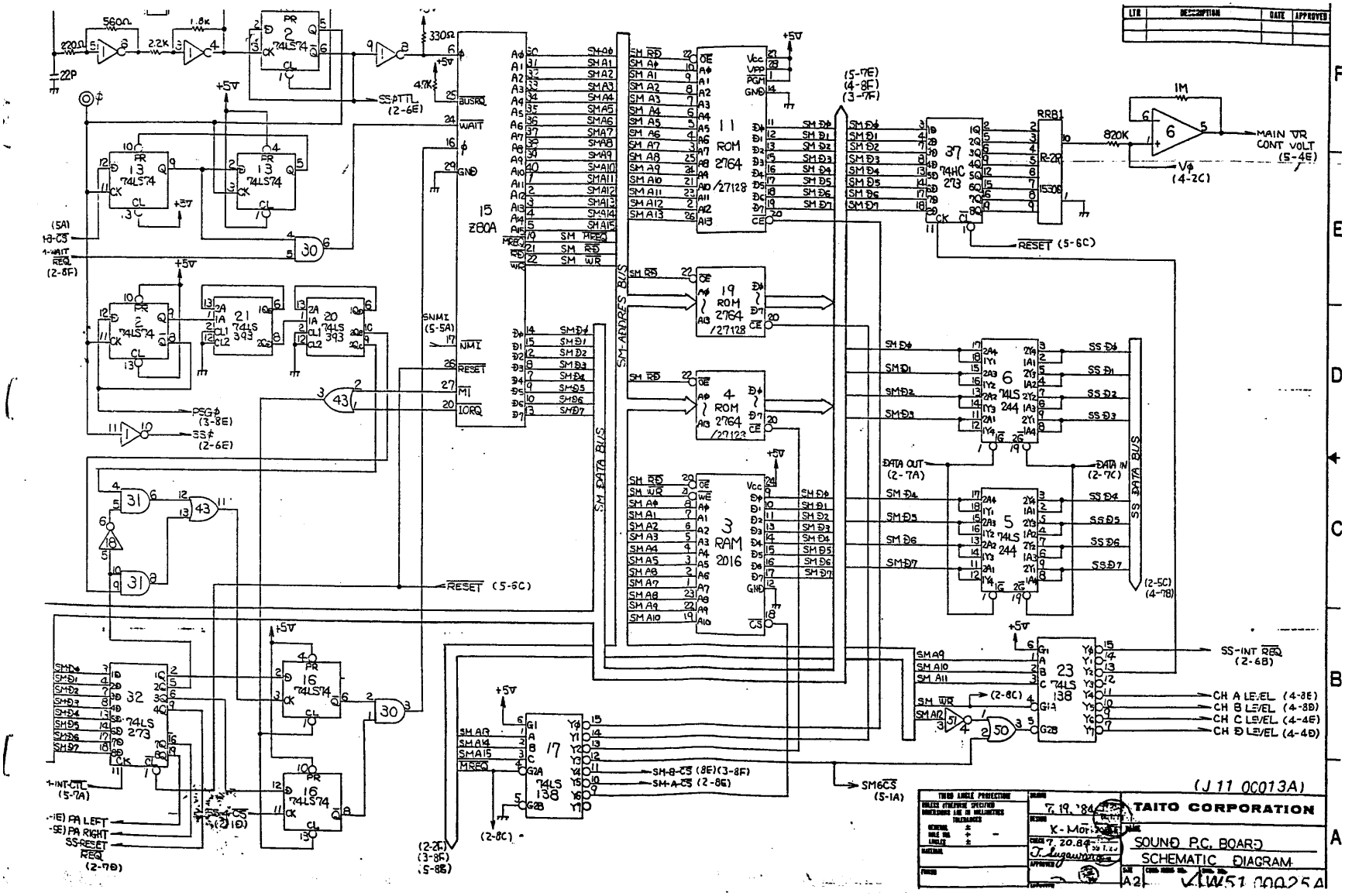
TAITO CORPORATION
SOUND P.C. BOARD
SCHEMATIC DIAGRAM
(J 11 00013A)
K-Mori
T. Inagawa
7. 19. '84
7. 20. 84
A2
MAIN VR CONT VOLT (5-4E)
RESET (5-6C)
SS-INT REQ (2-6B)
CH A LEVEL (4-8E)
CH B LEVEL (4-8D)
CH C LEVEL (4-4E)
CH D LEVEL (4-4D)
SM6CS (5-1A)
SM-ADDRES BUS
SM DATA BUS
SS DATA BUS
11 ROM 2764 /27128
19 ROM 2764 /27128
4 ROM 2764 /27128
3 RAM 2016
15 Z80A
37 74HC 273
6 74LS 244
5 74LS 244
23 74LS 138
17 74LS 138
32 74LS 273
21 74LS 393
20 74LS 393
13 74LS 74
2 74LS 74
16 74LS 74
RRB1
R-2R
1M
820K
330Ω
560Ω
1.8K
2.2K
22P
4.7K
SS-PTTL (2-6E)
PSG-φ (3-8E)
SS-φ (2-6E)
SNMI (5-5A)
DATA OUT (2-7A)
DATA IN (2-7C)
SS-RESET REQ (2-7D)
PA LEFT
PA RIGHT
SM-B-CS (8E)(3-8F)
SM-A-CS (2-8E)

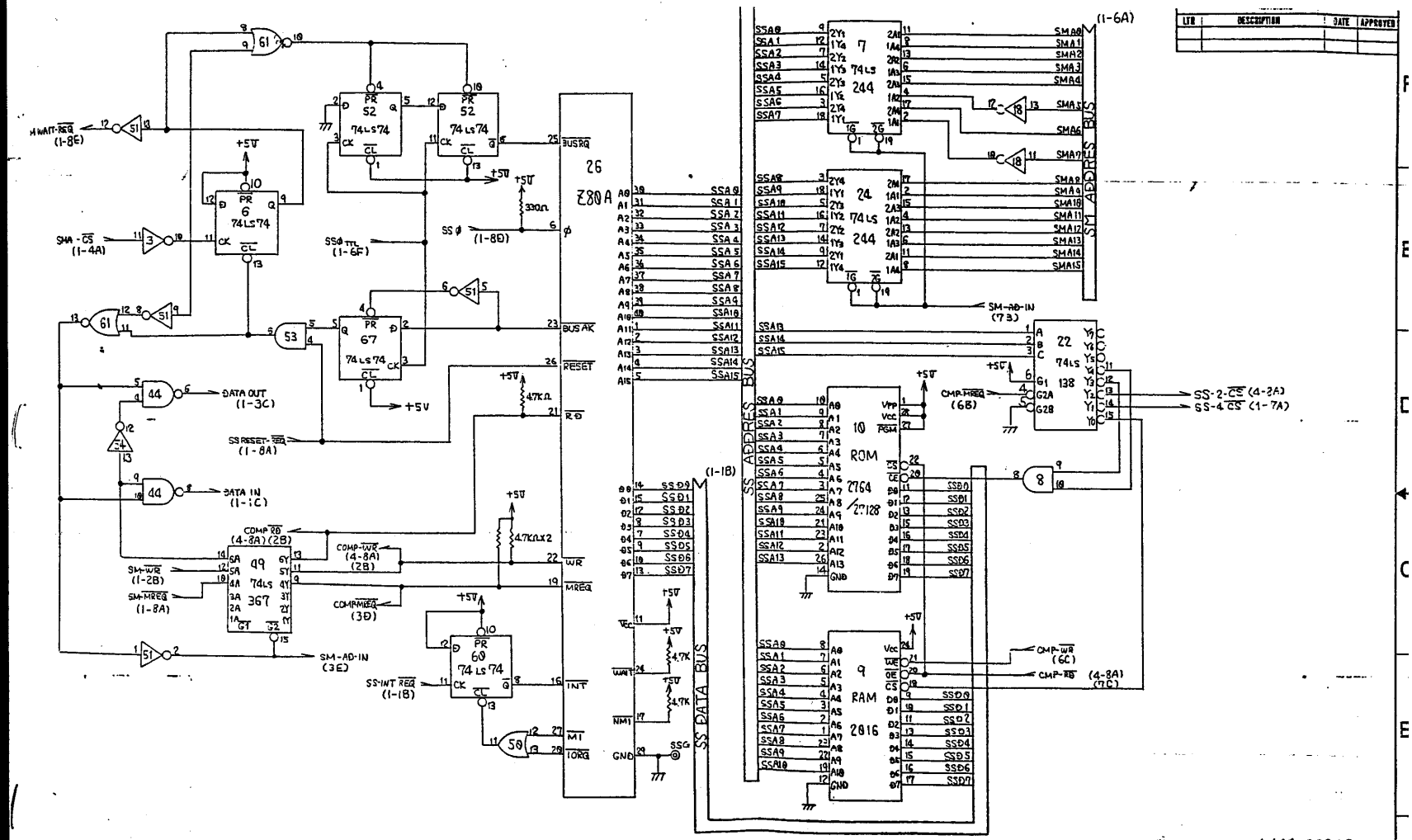
Z80A
26
74LS244
7
24
74LS138
22
ROM
2764
2716
10
RAM
9
74LS367
49
74LS74
52
67
6
60
SS DATA BUS
SS ADDRESS BUS
SM ADDRESS BUS
(J11 0C013A)
TAITO CORPORATION
SOUND P.C. BOARD
SCHEMATIC DIAGRAM
K-Mori
7.19.84
7.20.84

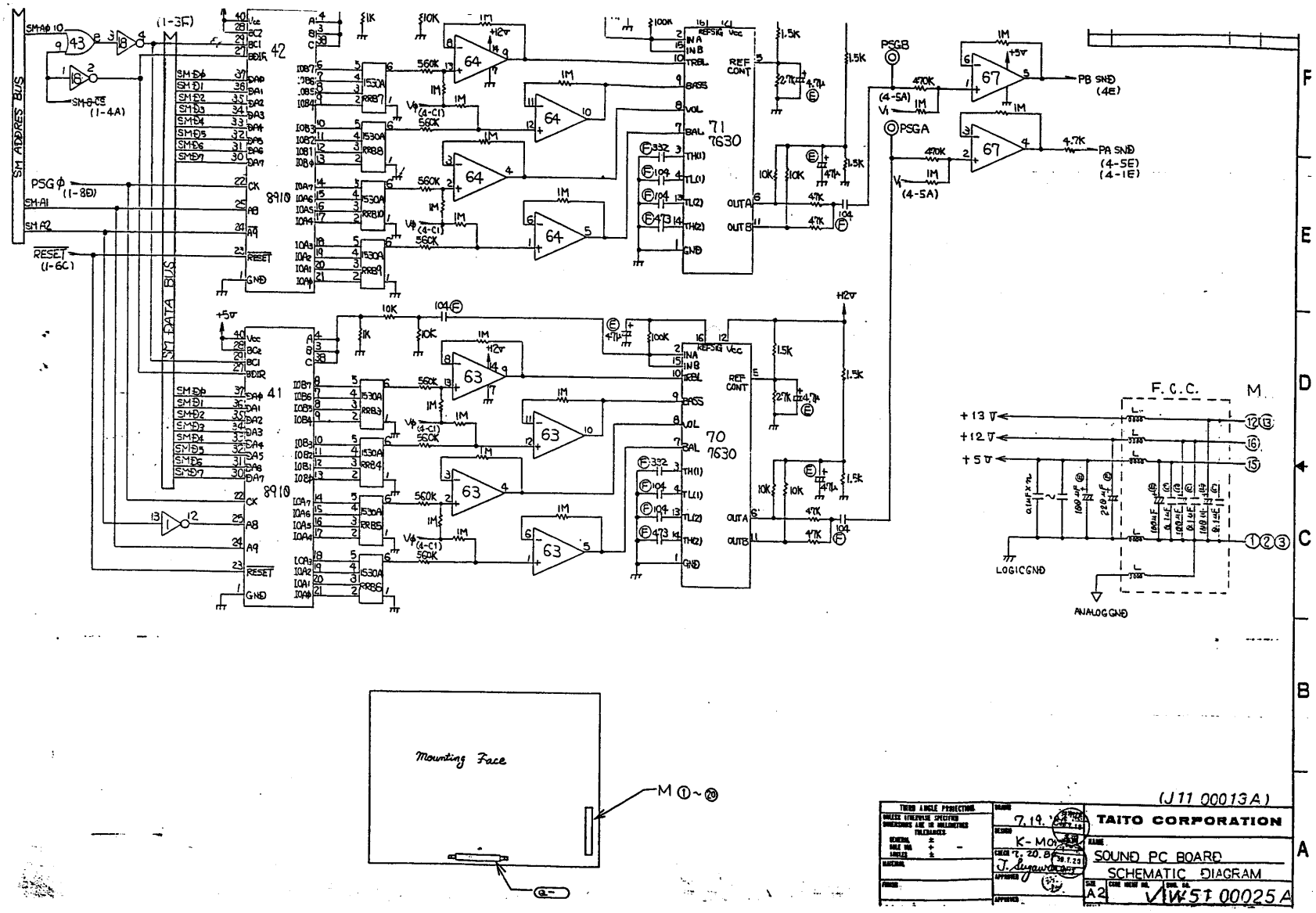
SM ADDRESS BUS
SM DATA BUS
PSG φ (1-8D)
RESET (1-6C)
SM-A0 10
SM-8-CS (1-4A)
(1-3F)
42
41
8910
71 7630
70 7630
REF CONT
PSGB
PSGA
(4-5A)
PB SND (4E)
PA SND (4-5E) (4-1E)
F.C.C.
M
+13V
+12V
+5V
LOGICGND
ANALOGGND
Mounting Face
M ①~⑳
(J11 00013A)
TAITO CORPORATION
SOUND PC BOARD
SCHEMATIC DIAGRAM
A2
VW51 00025A

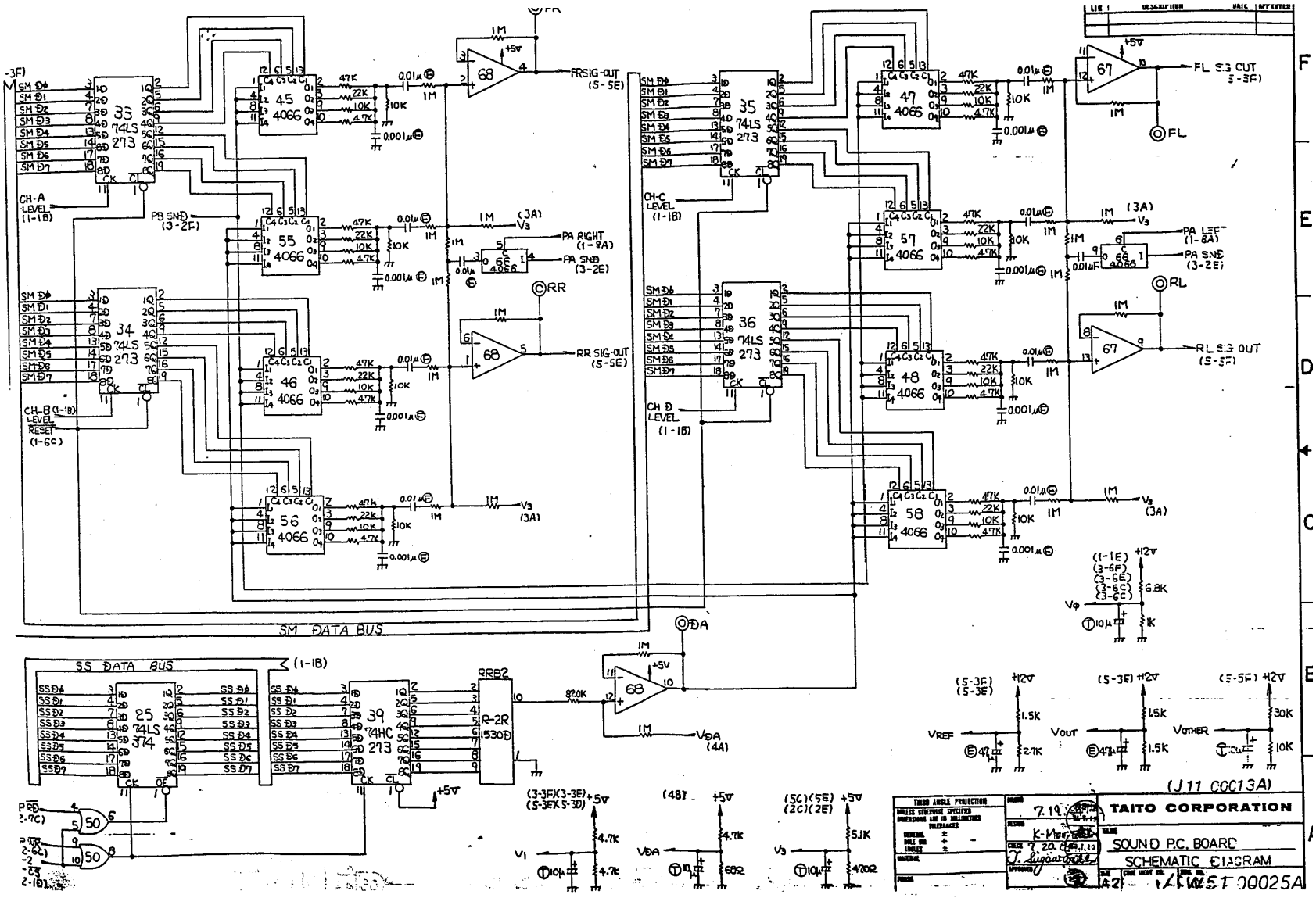
SM DATA BUS
SS DATA BUS
FRSIG-OUT (5-5E)
RR SIG-OUT (5-5E)
FL SIG OUT (5-5F)
RL SIG OUT (5-5F)
PA RIGHT (1-8A)
PA SND (3-2E)
PA LEF (1-8A)
PB SND (3-2F)
CH-A LEVEL (1-1B)
CH-B LEVEL RESET (1-6C)
CH-C LEVEL (1-1B)
CH D LEVEL (1-1B)
RRB2
R-2R
TAITO CORPORATION
SOUND P.C. BOARD
SCHEMATIC DIAGRAM
(J11 C0013A)

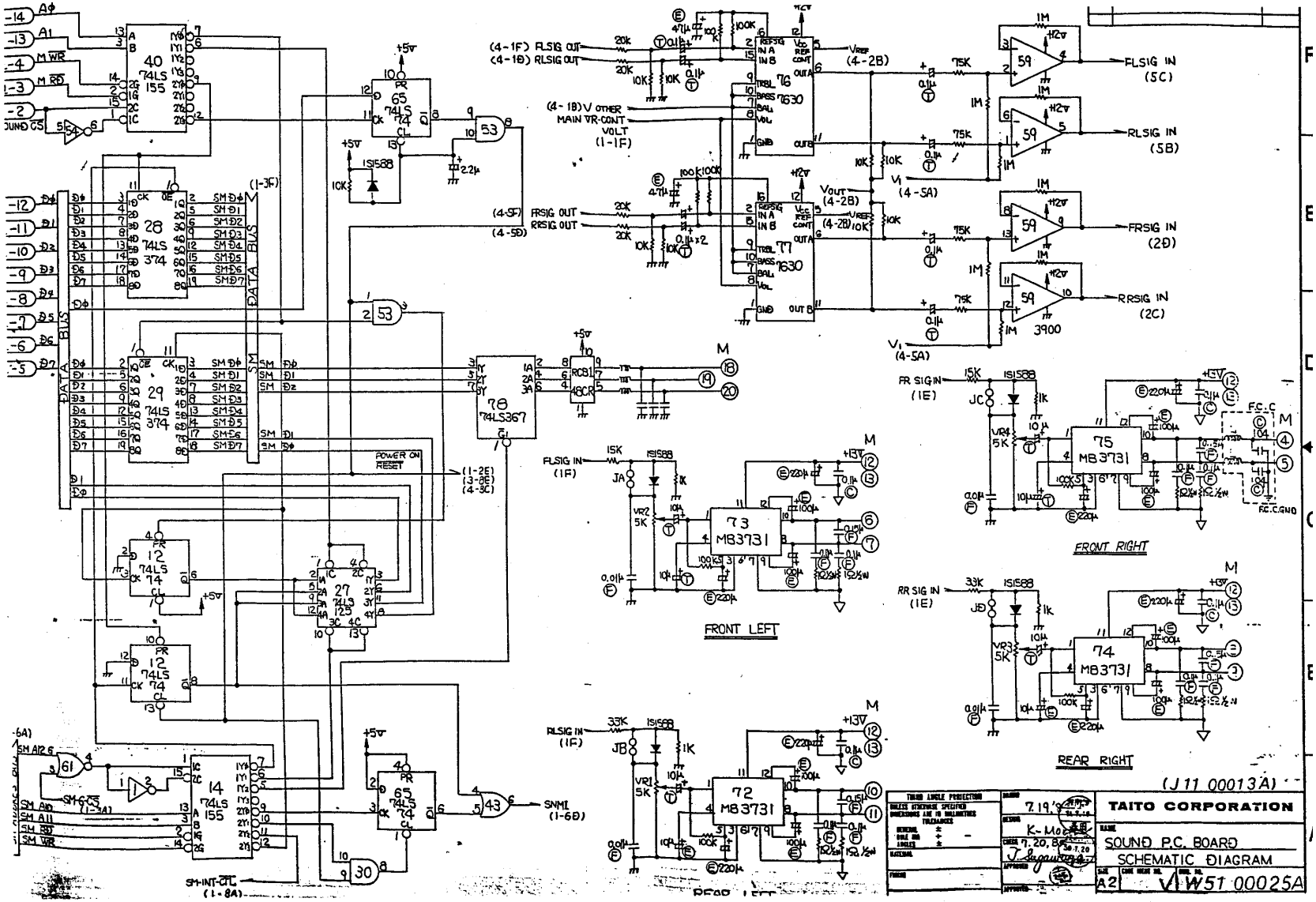
TAITO CORPORATION
SOUND P.C. BOARD
SCHEMATIC DIAGRAM
A2
W51 00025A
(J11 00013A)
K-Mo
7.19.
7.20.80
FRONT RIGHT
FRONT LEFT
REAR RIGHT
REAR LEFT
FLSIG IN (5C)
RLSIG IN (5B)
FRSIG IN (2D)
RRSIG IN (2C)
FLSIG OUT
RLSIG OUT
FRSIG OUT
RRSIG OUT
(4-1F) FLSIG OUT
(4-1D) RLSIG OUT
(4-1F) FRSIG OUT
(4-5D) RRSIG OUT
(4-1B) V OTHER
MAIN VR-CONT
VOLT
(1-1F)
(4-2B)
(4-5A)
(4-2D)
FR SIG IN (1E)
RR SIG IN (1E)
FLSIG IN (1F)
RLSIG IN (1F)
POWER ON RESET
SM-INT-CL (1-8A)
SNMI (1-6D)
DATA BUS
SM BUS
F.C.C
F.C.C.GND
40 74LS 155
28 74LS 374
29 74LS 374
12 74LS 74
27 74LS 125
14 74LS 155
65 74LS 74
78 74LS367
RC81 48CR
73 MB3731
72 MB3731
75 MB3731
74 MB3731
76 7630
77 7630
59 3900